KHRONOS

KHRONOS ECOSYSTEM FOR IPHONE 15 PRO / 15 PRO MAX

KHRONOS iPhone 15 Pro / 15 Pro Max 专用手机壳拓展套件

01 DISCLAIMER

Thank you for purchasing KHRONOS products .

Before using this product, please carefully read this document to ensure that the product has been set up correctly. The final interpretation of this document and all related documents for this product belongs to KHRONOS. For updates, please visit the official website at www.tilta.com for the latest product information. KHRONOS reserves the right to modify any information in this manual at any time without prior notice and without assuming any responsibility.

By using this product, you are deemed to have carefully read the disclaimer and warnings, understood, agreed, and accepted all the terms and content of this statement. You promise to take full responsibility for the use of this product and any consequences that may arise. You commit to using this product only for legitimate purposes and agree to these terms as well as any related regulations, policies, and guidelines set by KHRONOS.

KHRONOS is not responsible for any damages, injuries, or legal liabilities caused directly or indirectly by the use of this product. Users should follow all safety guidelines mentioned in this document, including but not limited to those mentioned.

Despite the above provisions, consumer rights are still protected by local laws and regulations and are not affected by this disclaimer.

02 CAUTIONS & WARNINGS

Prior to using this product, please strictly adhere to the following instructions. KHRONOS assumes no responsibility for any consequences resulting from improper operation or misuse.

Accessory Notices

- Some product kits include the KHRONOS Focus PD Handle for iPhone (TK-IP-PH-SG), which features a built-in 7.4V 37Wh 5000mAh lithium battery.
- KHRONOS's Card Holder and Cooling System for iPhone (TK-IP-CS-SG) (optional) can magnetically attach to an iPhone.
- The KHRONOS Cooling System for iPhone (TK-IP-CS-SG) (optional) may generate slight heat during operation. This is normal.

Accessory Requirements

- Charging environment temperature higher than 40°C or lower than 5°C may lead to battery performance degradation, expansion, leakage, overheating and other damages.
- Do not store the battery in an environment that exceeds 60°C. The ideal ambient temperature for storage is 22°C to 28°C.

Operating Environment

- Use the battery in an environment where the temperature is between -20 °C and 45 °C. Higher temperatures may cause abnormalities in the battery. Excessive temperatures may cause abnormal expansion, fire, or even explosion of the battery. It is recommended to fully charge the battery at room temperature before using it in a low-temperature.
- Do not place the device near flammable or combustible materials (e.g. carpets and wooden products) for charging. Keep an eye on the charging process to prevent accidents.
- Store the device in a dry environment. Ideally, the device should be stored in an environment with a humidity of no more than 40%.

Battery Safety

⚠ [Warning]

- KHRONOS Focus PD Handle for iPhone (TK-IP-PH-SG) is equipped with a non-removable built-in battery. Please do not attempt to replace the battery yourself to avoid damaging the battery or the device.
- Do not expose the battery to high temperatures or around heat generating devices such as sunlight, heaters, microwaves, ovens or water heaters. Overheating of the battery may cause an explosion.

Battery Safety

⚠ [Warning]

- Do not disassemble or modify the battery, insert foreign objects, or immerse it in water or other liquids, as this may cause the battery to leak, overheat, catch fire, or explode.
- The electrolyte inside the battery is highly corrosive. If it accidentally comes into contact with your skin or eyes, rinse immediately with clean water for at least 15 minutes and seek medical attention.
- Do not throw the battery into fire, as this can cause it to catch fire and explode.
- Do not drop, squeeze, or puncture the battery. Avoid subjecting the battery to external pressure, which may cause internal short circuits and overheating.
- Do not use damaged batteries.
- Do not store the battery for an extended period after it has been completely discharged, to avoid entering a deep discharge state that can cause damage to the battery cells, rendering it unable to be used again.
- Be sure to fully discharge the battery before disposing of it in a designated battery recycling bin. Batteries are hazardous chemicals and must not be disposed of in regular trash bins. For details, please follow the local laws and regulations regarding battery recycling and disposal.
- If the battery cannot be fully discharged, do not dispose of it directly in a battery recycling bin; instead, contact a professional battery recycling company for further processing.

Maintenance & Care

- Please keep the device clean and free of sand, dust, and other foreign objects. Use a clean, dry cloth to promptly clean any debris on the product.
- Do not subject the device and its accessories to strong impacts or vibrations, as this may damage them and cause device failure.

04 MEET KHRONOS IPHONE 15 PRO/15 PRO MAX CASE

KHRONOS IPHONE 15 PRO CASE

<FRONT> <BACK>

PRODUCT SPECIFICATIONS

- Material: Aluminum Alloy + Plastic + Silicone
- Dimensions: 156.6×80.6×14mm
- Weight: 69.5g (case);
  127.5g (case + card holder)
- Color: Space Gray / Titanium White

<BOTTOM>

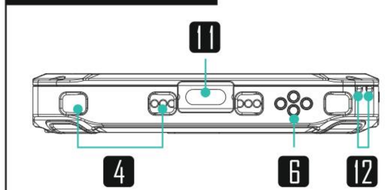

1 M2 Screw

2 Phone Case Top Cover

3 Card Holder Safety Clip

4 Quick-Release Mounting Points

5 Smartphone Button Access

6 Electronic Contact Points

7 Protective Padding

8 Anti-rotation Slot

9 Cooling System Locating Points

10 Card Holder

11 USB-C Port Slot

12 Lanyard Points

KHRONOS IPHONE 15 PRO MAX CASE

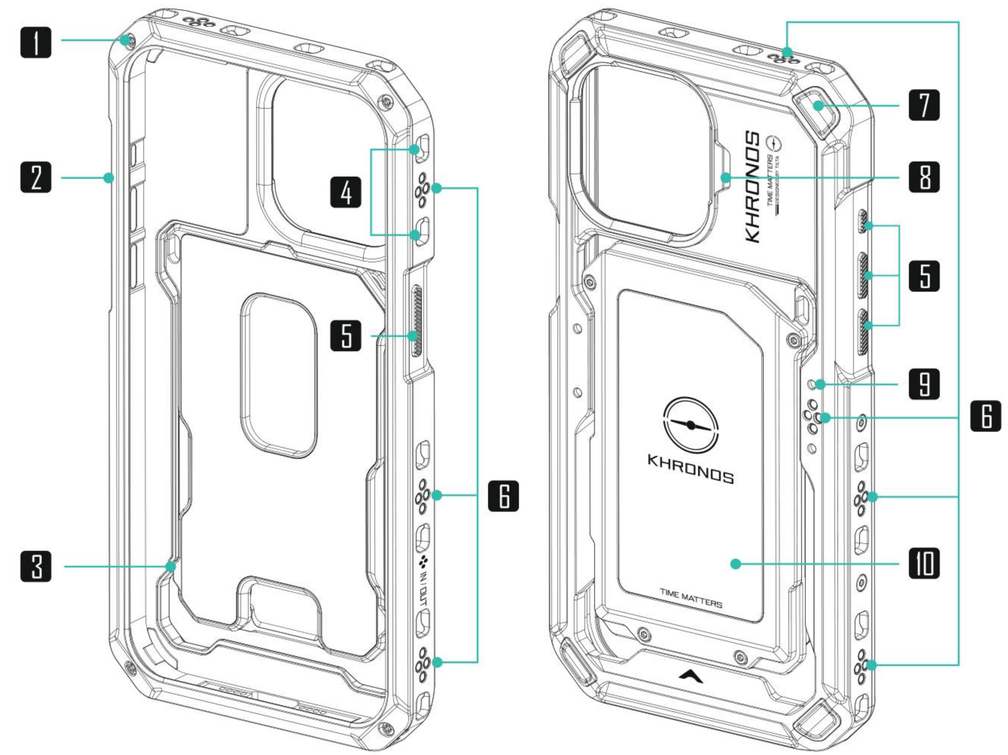

<FRONT> <BACK>

PRODUCT SPECIFICATIONS

- Material: Aluminum Alloy + Plastic + Silicone
- Dimensions: 169.8×86.8×14mm
- Weight: 83g (phone case) ;
  138g (phone case + card holder)
- Colors: Space Gray / Titanium White

<BOTTOM>

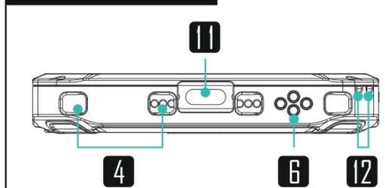

05 ASSEMBLING KHRONOS IPHONE 15 PRO / 15 PRO MAX CASE

[KHRONOS iPhone 15 Pro Max Case] Place the phone into the case ① and secure the top cover ② to the case using the M2 screws, completing the assembly.

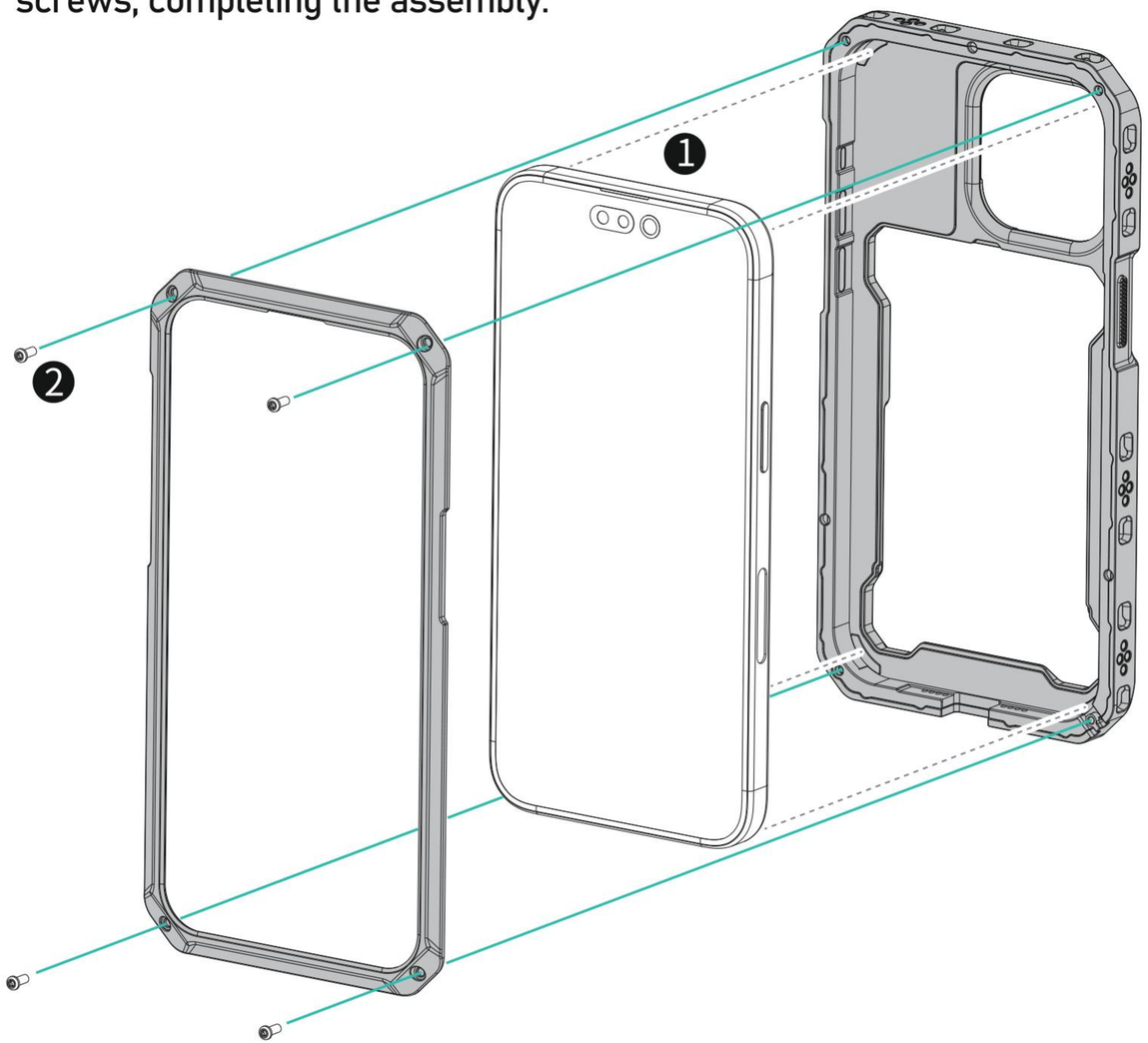

ASSEMBLING THE CARD HOLDER

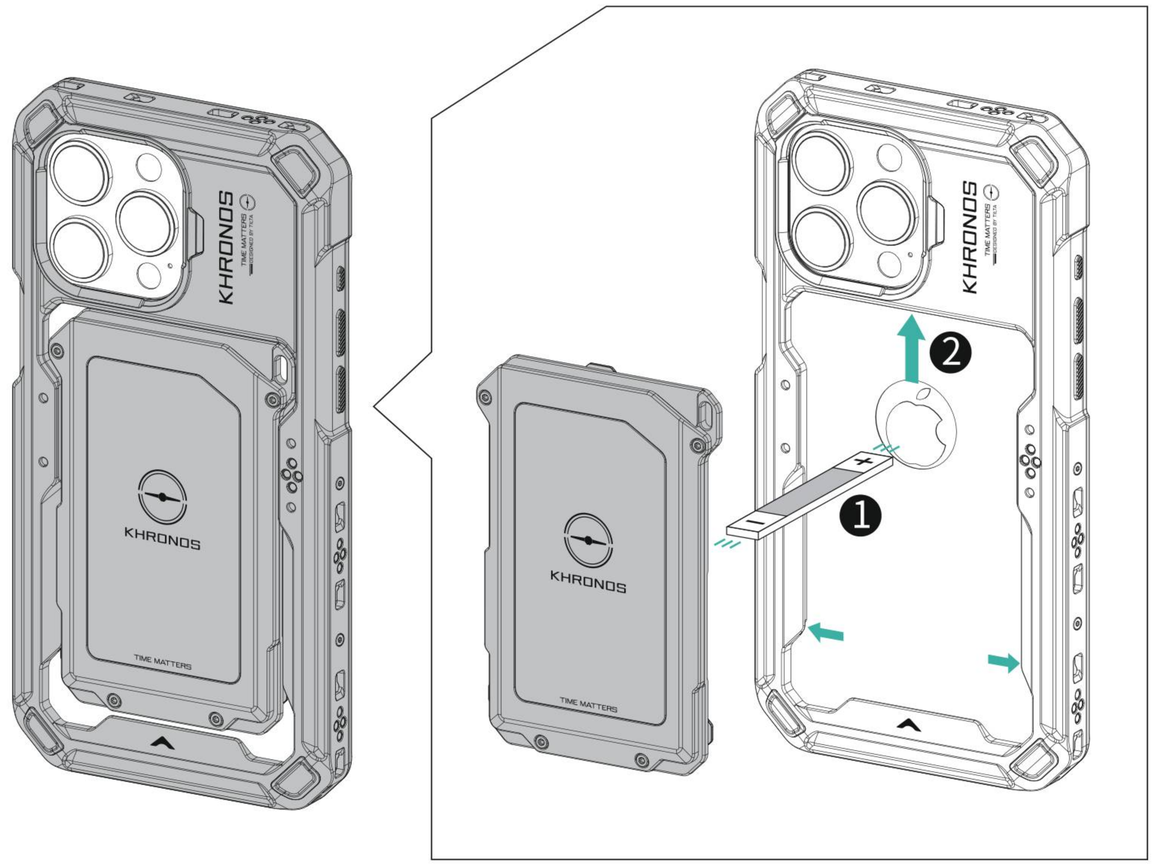

[KHRONOS iPhone 15 Pro Max Case] After magnetically attaching the cardholder to the back of the case ①, push upwards to insert the cardholder ② into the cardholder slot on the case to complete the assembly.

06 MEET KHRONOS COOLING SYSTEM FOR IPHONE (OPTIONAL)

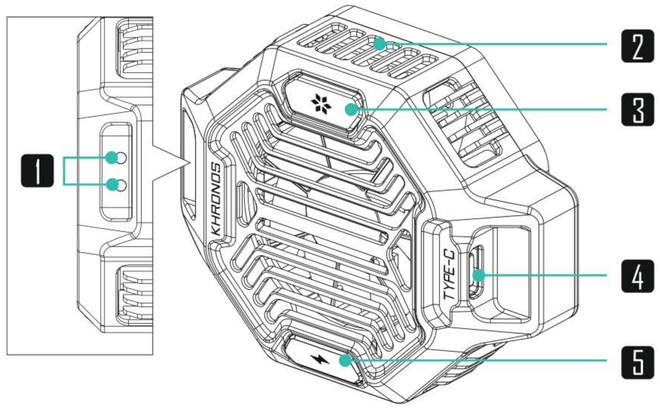

<FRONT>

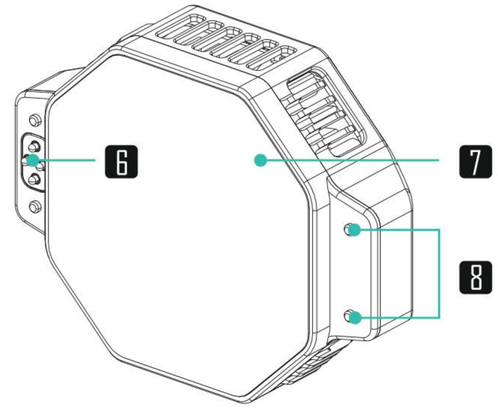

<BACK>

1 Function Indicator Light

2 Cooling Vent

3 Cooling Function Button

4 USB-C Port (PD Input 27W)

5 Wireless Charging Function Button

6 Electronic Contact Pins (Input 6-12V)

7 Cooling Panel

8 Locating Pins

The cooling system does not include a battery and does not have a built-in battery ; it requires an external power source for operation.

PRODUCT SPECIFICATIONS

- Material: Aluminum Alloy
- Weight: 106.5g
- Dimensions: 77.6×58.4×25.5mm
- Color: Space Gray / Titanium White

BUTTON FUNCTION

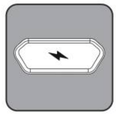

Wireless Charging Function Button

1st level (single click): Outputs 5W, white light

2nd level (single click again): Outputs 10W bright white light

Cooling Function Button

1st level (single click): Standard cooling, blue light

2nd level (single click again): Increased cooling, dark blue light

ASSEMBLING THE COOLING SYSTEM

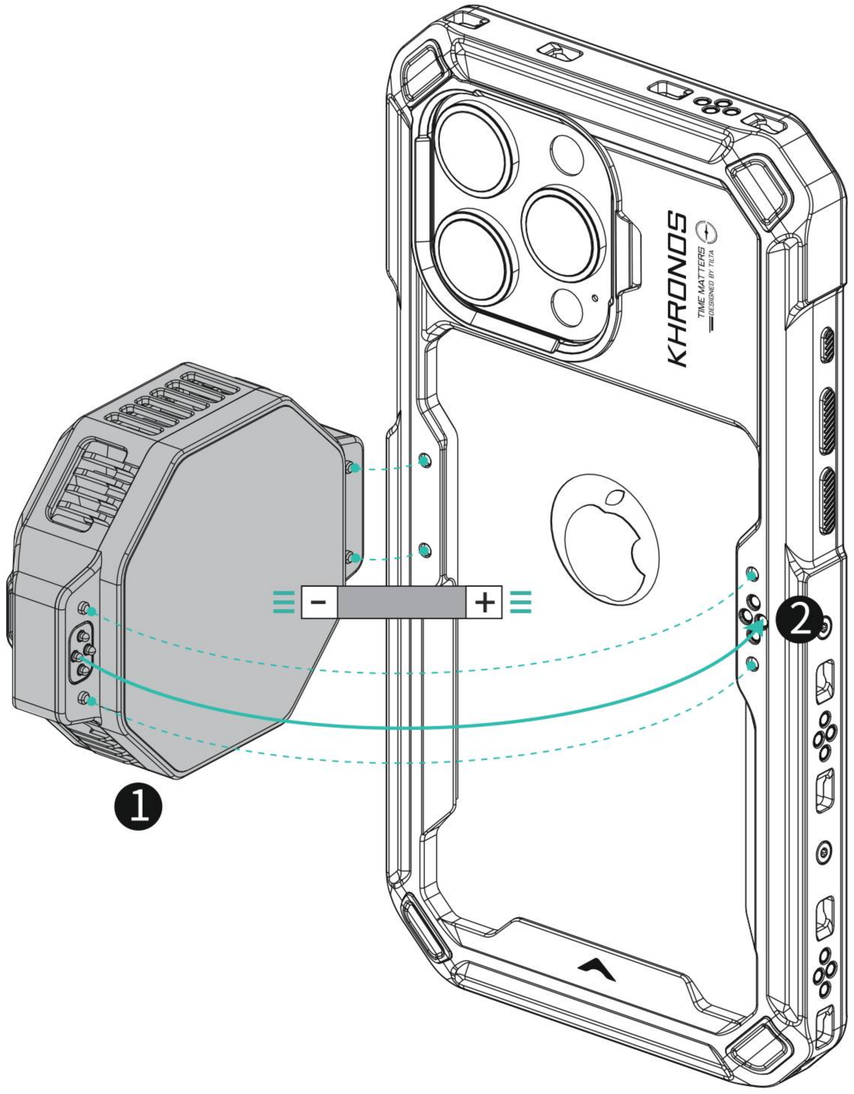

[KHRONOS iPhone 15 Pro Max Case] Align the cooling system ① with the locating points and contact points on the back of the phone case ②, and magnetically attach it to the back of the phone to complete the assembly.

07 KHRONOS COOLING SYSTEM FOR IPHONE EXTERNAL POWER SUPPLY INSTRUCTIONS

USB-C PORT POWER SUPPLY

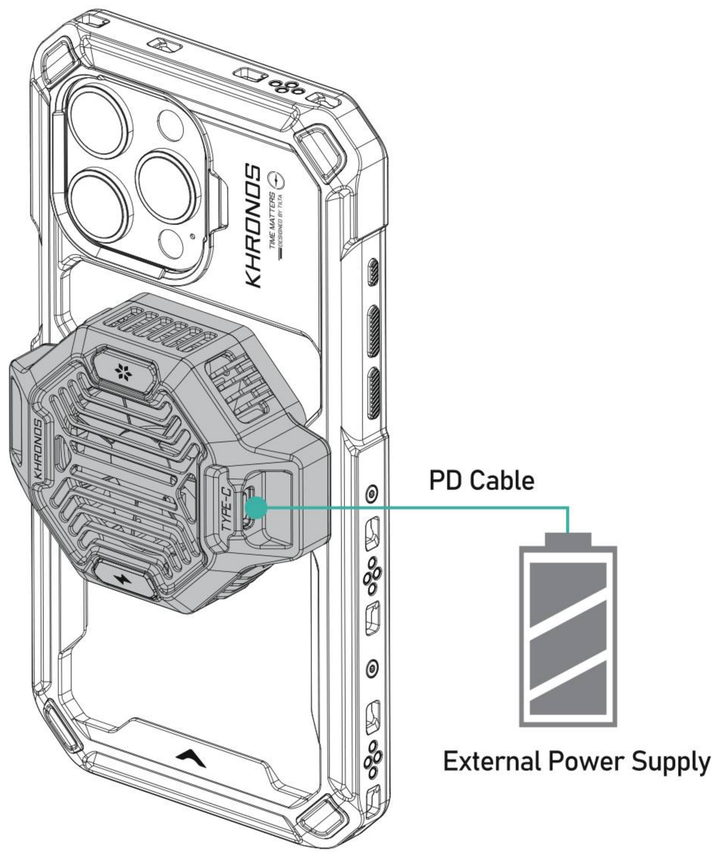

< WITH PHONE CASE >

The USB-C port and an external power supply provides power to both the cooling system and the phone case (also powers the phone via MagSafe).

PHONE CASE POWER SUPPLY

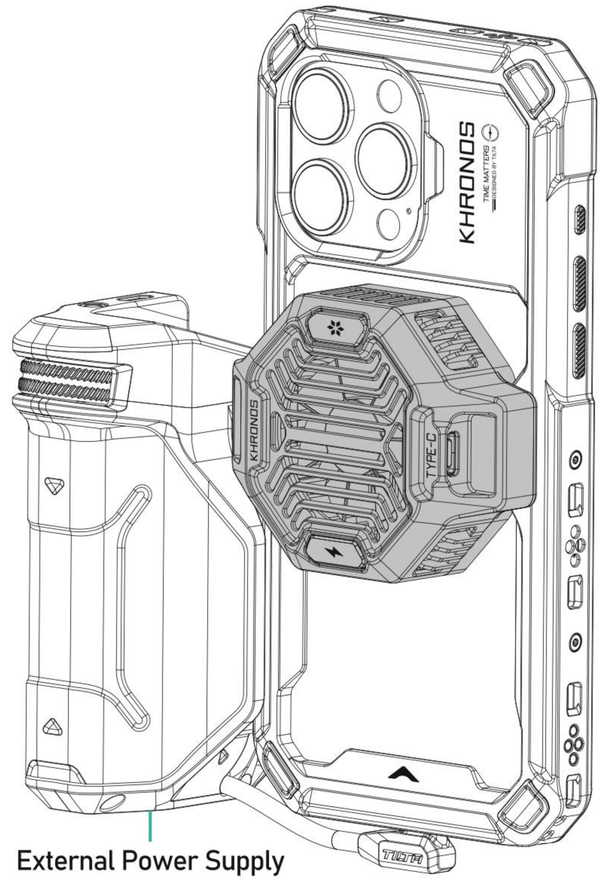

< WITH PHONE CASE >

The focus power handle powers the phone case and cooling system through contact points.

MAGSAFE POWER SUPPLY

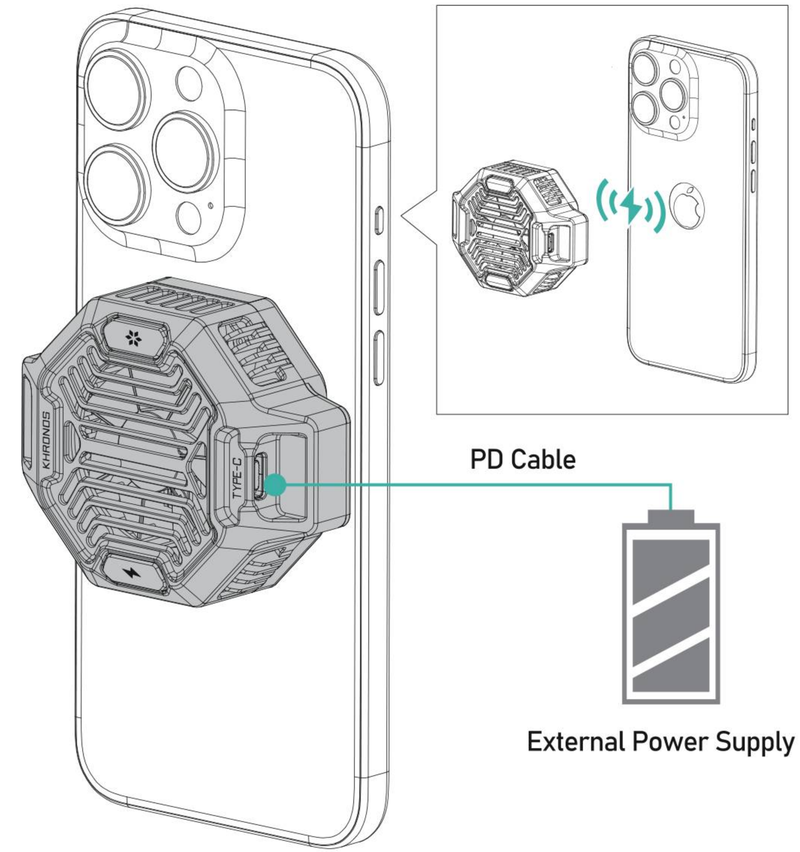

< WITHOUT PHONE CASE >

The USB-C port and an external power supply provides power to the cooling system, and also powers the phone via MagSafe.

08 MEET KHRONOS FOCUS PD HANDLE FOR IPHONE (OPTIONAL)

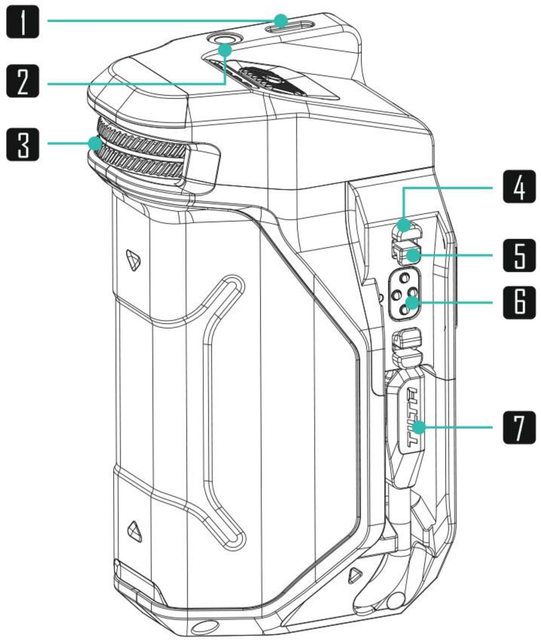

<FRONT>

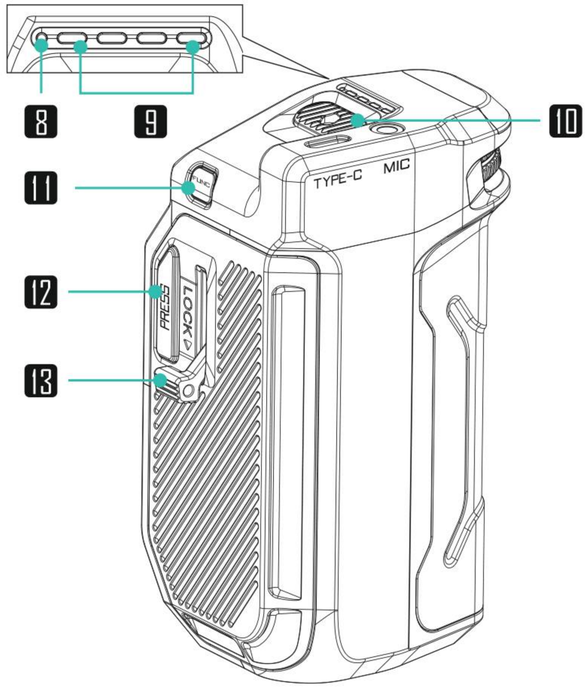

<BACK>

1. USB-C Port (PD Dual-directional Fast Charging)
2. 3.5mm Microphone Port (for 4-Pole 3.5mm Audio Cables)
3. Dial
4. Locating Pins
5. Clamp
6. Electronic Contact Pins
7. USB-C Power Cable (Output only) (70mm)
8. Status Indicator Light
9. Power Indicator Light
10. Power/Record Button
11. Function Button
12. Clamp Release Button (Press to unlock)
13. Locking Lever

PRODUCT SPECIFICATIONS

- Material: Alumium Alloy+SUS304+Silicone+ABS+PC
- Weight: 300g
- Dimensions: 103.8×49×65.1mm
- Colors: Space Gray/ Titanium White

FEATURE DESCRIPTION

Function Button

01 Single Click: Toggle between ZOOM and FOCUS functions in the Blackmagic Cam APP.

02 Double Click: Switch between Bluetooth HID mode and APP mode.
(HID mode controls the native camera; APP mode controls Blackmagic Cam).

03 Long Press: Toggle the USB-C power cable on/off to supply power to the phone.

04 Triple Click: Clear phones paired through HID and APP modes. After clearing, the status indicator will flash red and green for 3 seconds. (After clearing, the paired phones will not reconnect automatically to the handle; the phone must re-pair.)

Power/Record Button

01 Hold for 3 seconds: Power on/off

02 Single click: In HID mode, when using the camera interface, one click takes a photo; when using video interface, one click starts recording. In APP mode, one click starts recording.

Dial

01 APP mode: Control zoom and focus in Blackmagic Camera App.

02 HID mode: Control zoom in native camera of certain Android devices.

INDICATOR LIGHT

Hold the [Power/Record] button for 3 seconds to power on — the red or green light / will illuminate.

Double click the [Function] button to switch modes — APP mode (solid red light) or HID mode (solid green light) .

Triple click the [Function] button to unpair devices — red and green lights will flash for 3 seconds.

Bluetooth connection confirmed — red light flashes (APP mode) or green light flashes (HID mode).

Firmware update status — yellow light turns on and then flashes .

09 ASSEMBLING KHRONOS FOCUS PD HANDLE FOR IPHONE

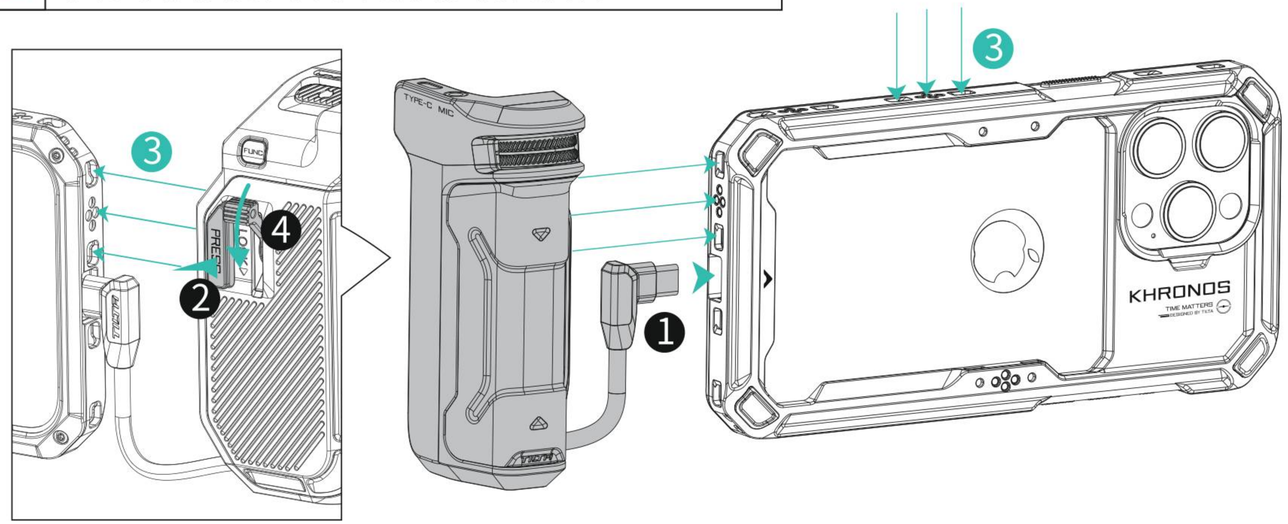

Power the smartphone via the handle's built-in USB-C cable. Connect the power cable ①, press the handle's clamp release button ② to attach it to the phone case's quick-release ports ③ (as shown in the image), and then lock the lever ④ to secure the handle.

Horizontal Shooting Mode

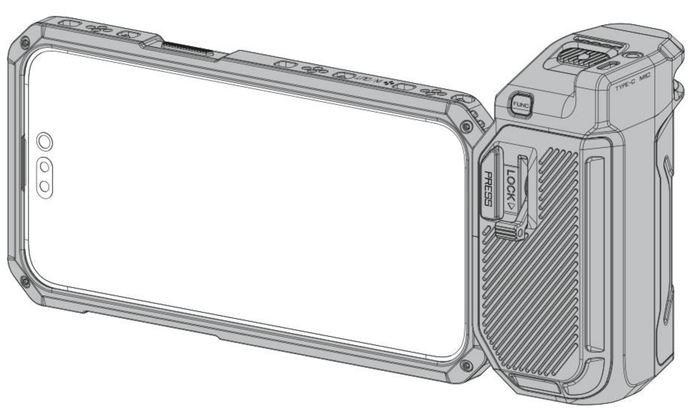

Vertical Shooting Mode

POWER INFORMATION

BATTERY CAPACITY
7.4V 37Wh 5000mAh

(1) Operating temperature: Charging: 0°C~45°C; Discharging: -20°C~60°C
(2) Storage temperature: -20°C~45°C
(3) Operating humidity: 90~95% (Max.)
(4) Storage relative humidity: ⩽70%RH
(5) Warranty period: fewer than 200 cycle counts (12 months)

USB-C POWER INPUT/OUTPUT RANGE

Input **30W** (When powered on, maximum input 5W; when powered off, maximum input 30W)

Output **20W** (When powered on, maximum output 5W; when powered off, maximum output 20W)

USB-C POWER CABLE OUTPUT RANGE

Output **20W**

FIRMWARE UPDATES

1. Download the latest firmware from the TILTA official website. If you have any installation queries, please consult TILTA's official customer service. (TILTA Official Website: www.tilta.com)
2. With the handle powered off, press and hold the [Function] button and the [Power/Record], button at the same time until the indicator light turns yellow and starts to flash ;
3. Connect the handle to a personal computer using a data cable via the Type-C port. Move the downloaded firmware update to the handle's drive to complete the update process.

10 KHRONOS FOCUS PD HANDLE FOR IPHONE - BLUETOOTH CONNECTION OVERVIEW

Connect the handle

Hold the [Power/Record] button for 3 seconds to power on

Double click the [Function] button to switch modes

01 After mounting the handle to the phone, hold the [Power/Record] button for 3 seconds to power on the device, and wait for the status indicator to light up.
Double click the [Function] button to switch modes — APP mode (steady red light) or HID mode (steady green light)

02 APP Mode — Control Blackmagic Cam APP

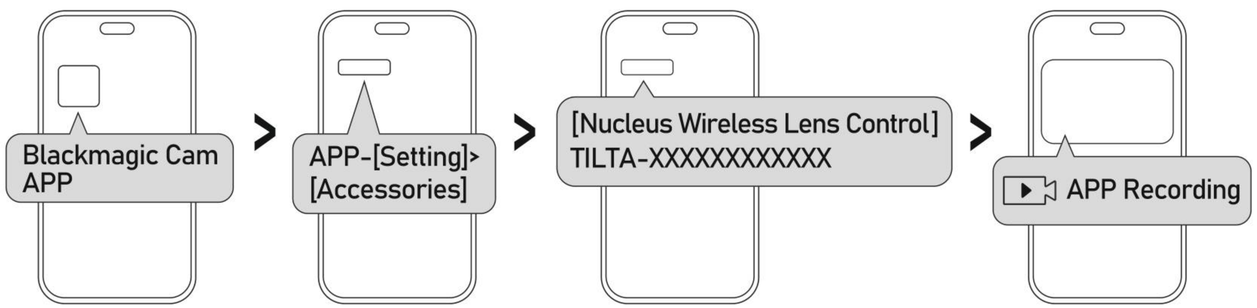

When the handle is in APP mode, open the Blackmagic Cam APP on the phone and go to [Settings]>[Accessories]>[Nucleus Wireless Lens Control] to link the handle.
Once connected, indicated by a flashing red light , the handle's [Record] button can start/stop recording, and the [Dial] adjusts focus and zoom in the APP.
(When operating in App Mode, switching modes or restarting the device requires manual Bluetooth reconnection in Blackmagic Camera App.)

03 HID Mode — Control Native Camera

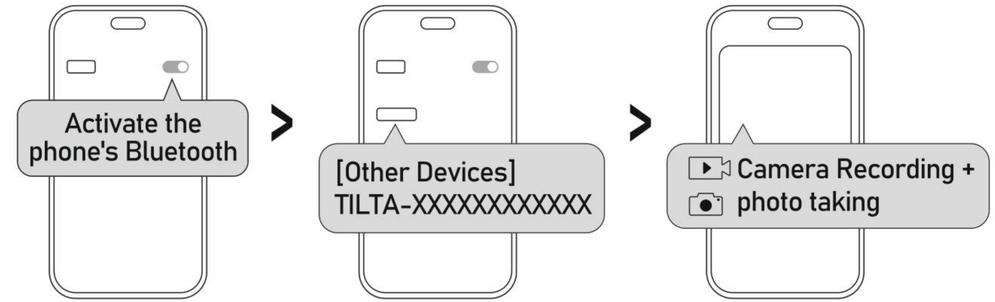

When the handle is in HID mode, activate the phone's Bluetooth on the phone and from the available device list, choose the handle for pairing. Once connected (green light flashes), the handle's [Record] button can control the phone's native camera for video and photos, and the [Dial] can adjust zoom in native camera on select Android models.
(When the controller is in HID mode and has been previously paired with the mobile phone's Bluetooth, upon reopening the phone's Bluetooth, the system will automatically connect to the controller's Bluetooth.)

---

1. The handle's current mode is indicated by the startup light; red for APP mode or green for HID mode.
2. Mode settings are retained after a reboot.
3. The handle has distinct Bluetooth names for each mode due to different MAC addresses.
(e.g., TILTA-000000000001 for APP,TILTA-000000000002 for HID)
4. In HID mode, the handle can also trigger recording in the Blackmagic Cam APP via [Settings]>[Camera]>using the volume keys.

11 MEET THE QUICK RELEASE USB-C HUB (OPTIONAL)

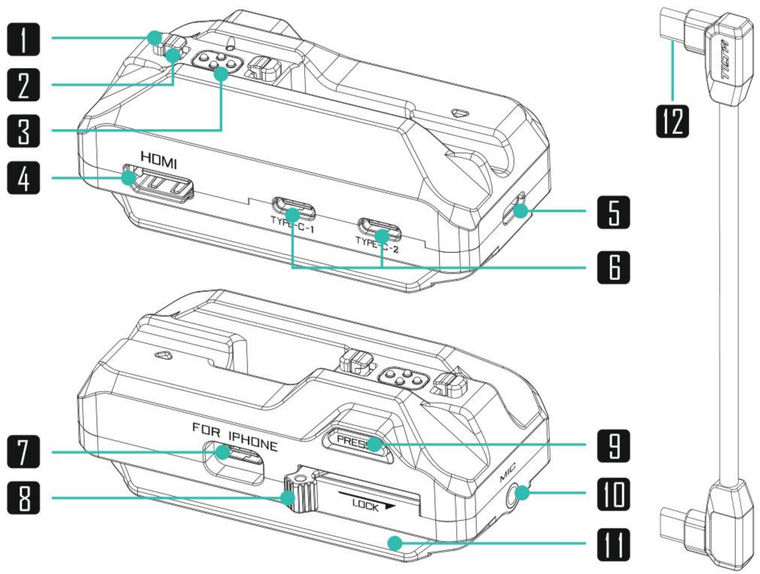

1 Clamp
2 Locating Pins
3 Electronic Contact Pins
4 HDMI Port
5 USB-C Power Input
(External power supply, maximum input of 20V/ 5A 100W, supports PD 3.0 protocol)
6 USB-C Ports
7 USB-C Port
(Connects to smartphone)
8 Locking Lever
9 Release Button
10 3.5mm Audio Port
(For 4-Pole 3.5mm Audio Cables)
11 Arca Plate
12 Dual Right Angle USB-C Cable

- Material: Alumium Alloy
- Dimensions: 55×32×17.6mm
- Weight: 99.5g
- Colors: Space Gray/Titanium White

The USB-C Hub does not include a battery and does not have a built-in battery; it requires an external power source for operation.

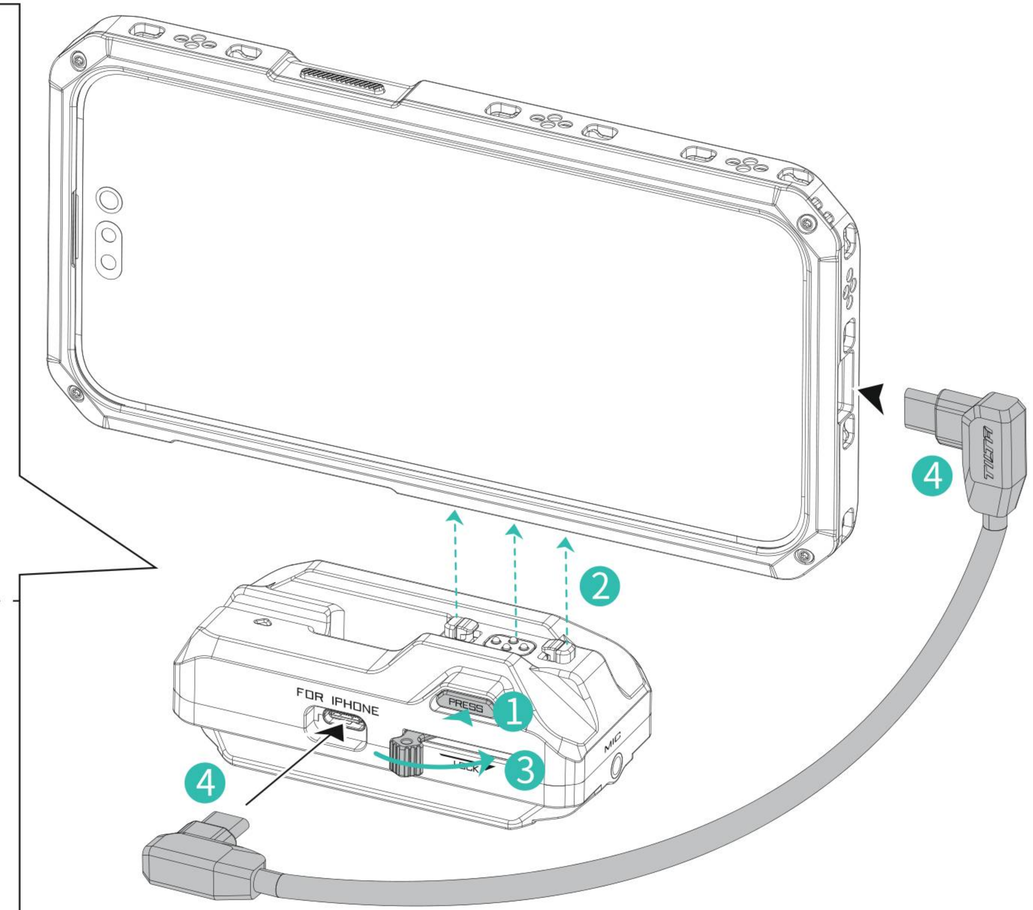

HORIZONTAL SHOOTING EXTENSION

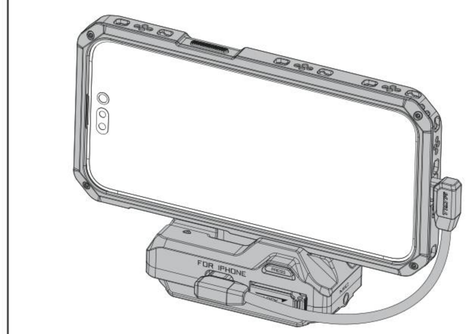

VERTICAL SHOOTING EXTENSION

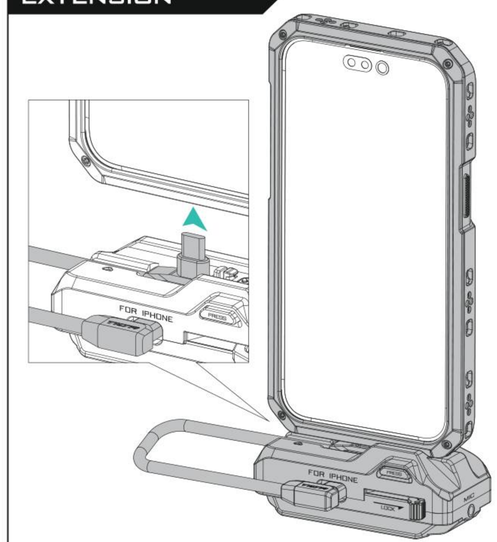

Assemble the USB-C Hub

(1) Press the USB-C Hub's release button ①, attach the USB-C Hub to the phone case's quick-release mounting points with dual electronic contacts ②, and lock the lever ③ to complete the assembly.

(2) Connect both ends of the configured Dual Right Angle USB-C cable ④ to the designated USB-C ports on the smartphone and the hub.

12 QUICK RELEASE USB-C HUB EXTERNAL POWER SUPPLY INSTRUCTIONS

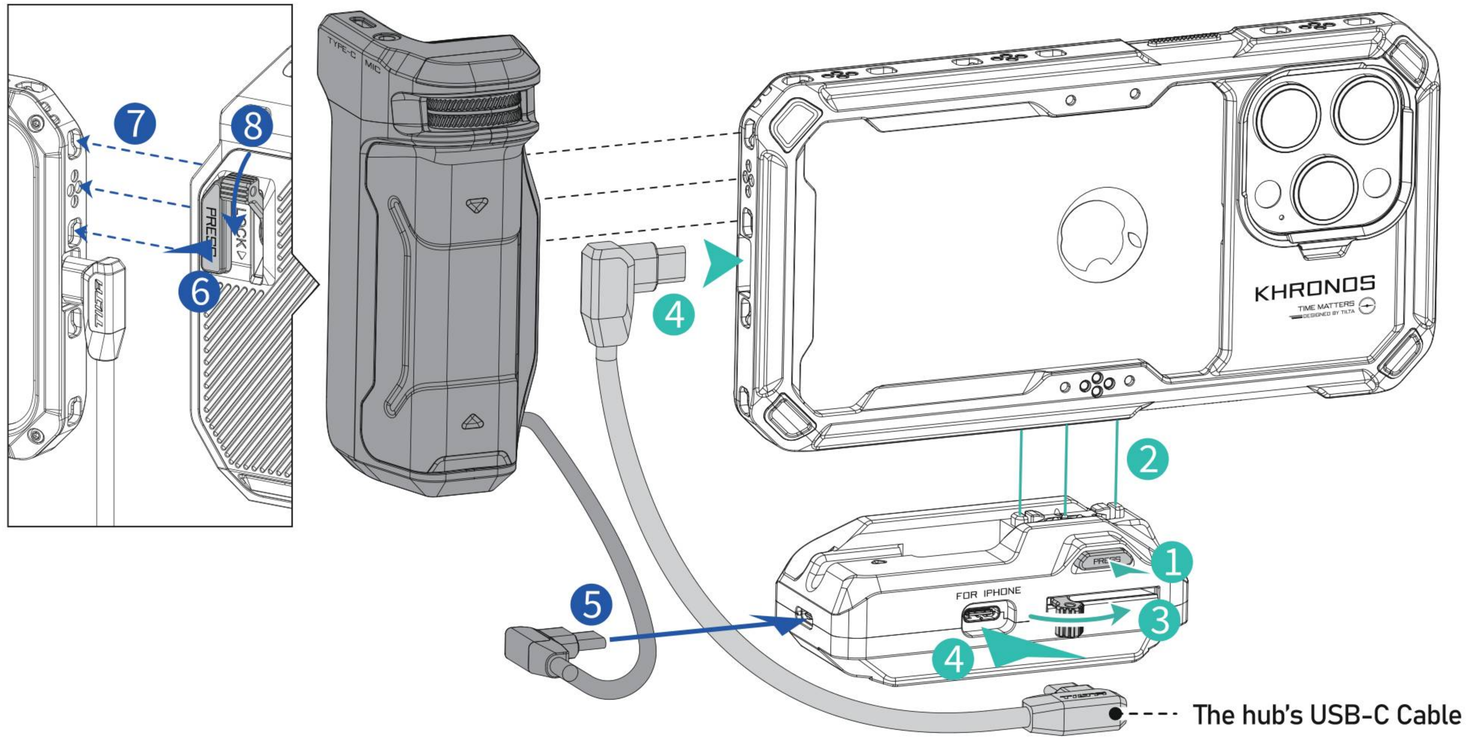

After assembling the hub according to the previous description (see 1 2 3 4 for the assembly order), an iPhone series focus power handle or other power sources can be connected to power the hub.

For the Khronos Power Handle for iPhone - powered by Cable

(1) Insert the handle's USB-C power cable into the hub's power input port 5.

(2) Press the release button 6 on the handle, attach the handle to the phone case's quick-release mounting points with dual electronic contacts 7, and then lock the lever 8 to secure the handle.

(3) Hold the power button D on the handle for 3 seconds to activate the handle.

(4) The handle powers both the hub and the phone case through the handle's USB-C power cable.

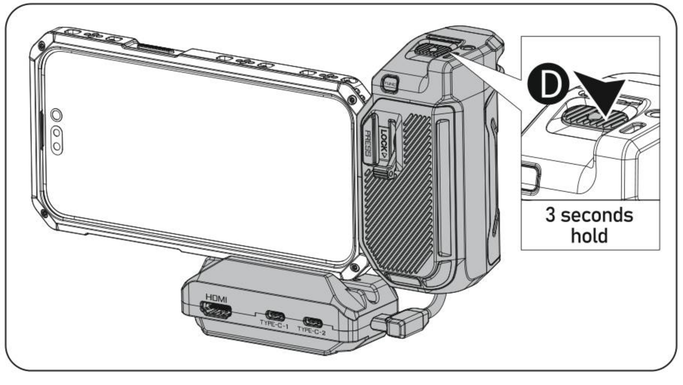

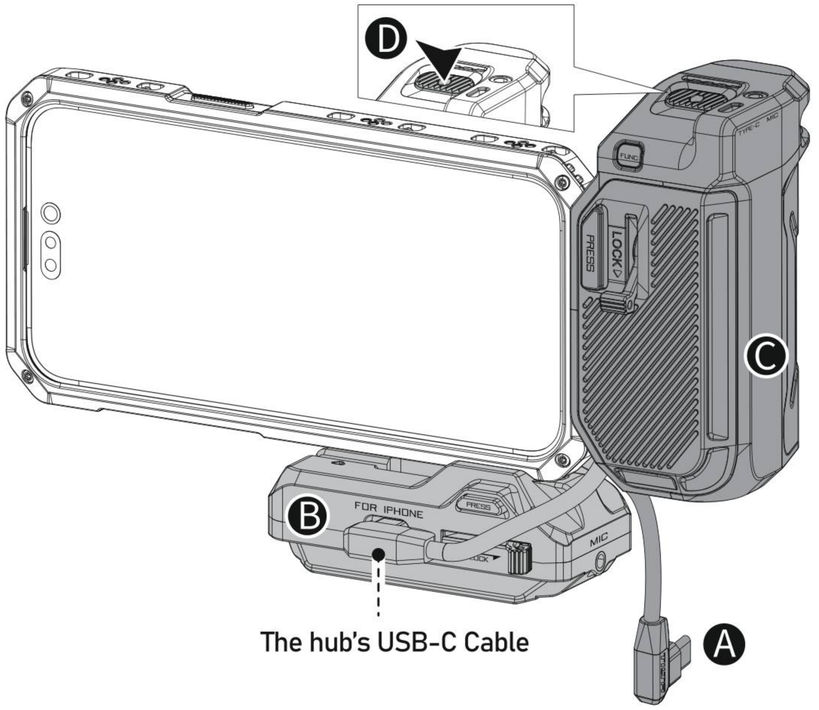

For the Khronos Power Handle for iPhone - powered by Electronic Contact Pins

(1) Dangle the handle's USB-C power cable A.

(2) Assemble the hub B and the handle C onto the phone case.

(3) Hold the power button D on the handle for 3 seconds to activate the handle.

(4) The handle powers both the hub and the phone case through the handle's electronic contact pins.

QUICK RELEASE USB-C HUB POWER SPECIFICATIONS

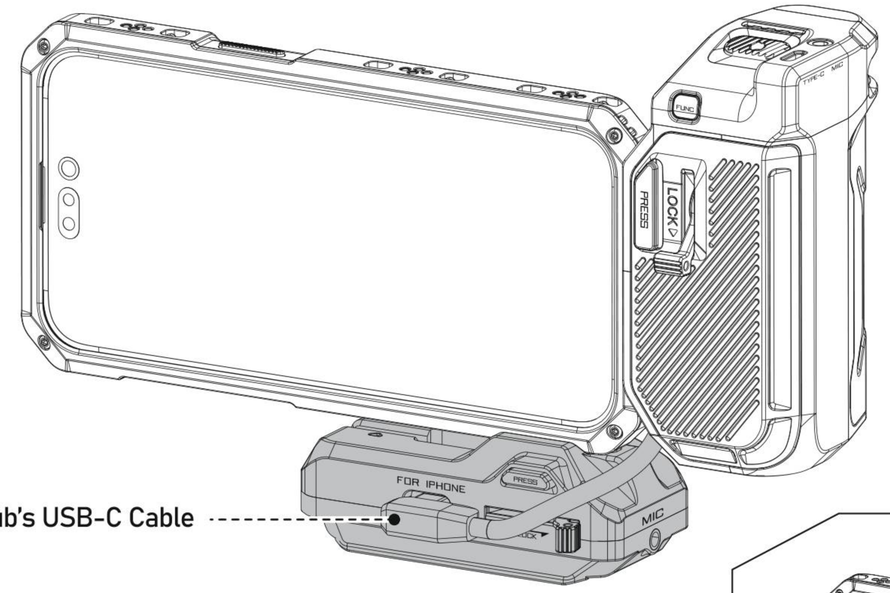

STANDARD HUB INSTALLATION

When the Hub is Installed in the Standard Orientation on the Phone Case:

(1) If PD < 45W (with 15W reserved by the product)
— Enables phone charging but disables power via electronic contacts.

(2) If 45W ⩽PD ⩽ 65W (with 15W reserved by the product)
— Disables phone charging but enables power via electronic contacts.

(3) If PD > 65W (with 15W reserved by the product)
— Enables both phone charging and power via electronic contacts.

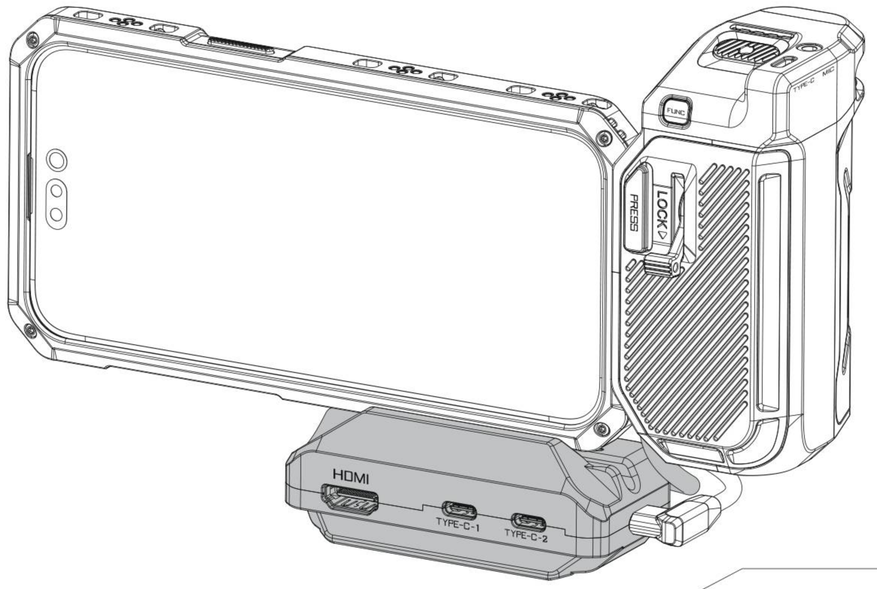

REVERSE HUB INSTALLATION

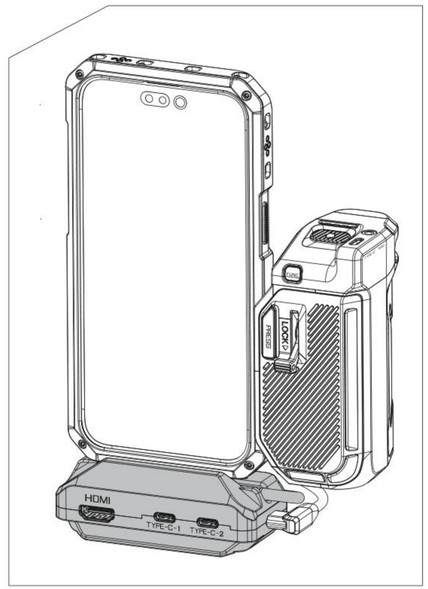

When the Hub is Installed in the Reverse Orientation on the Phone Case:
No power occurs through electronic contacts.

MEET KHRONOS NATO BRACKET WITH WOODEN HANDLE (OPTIONAL)

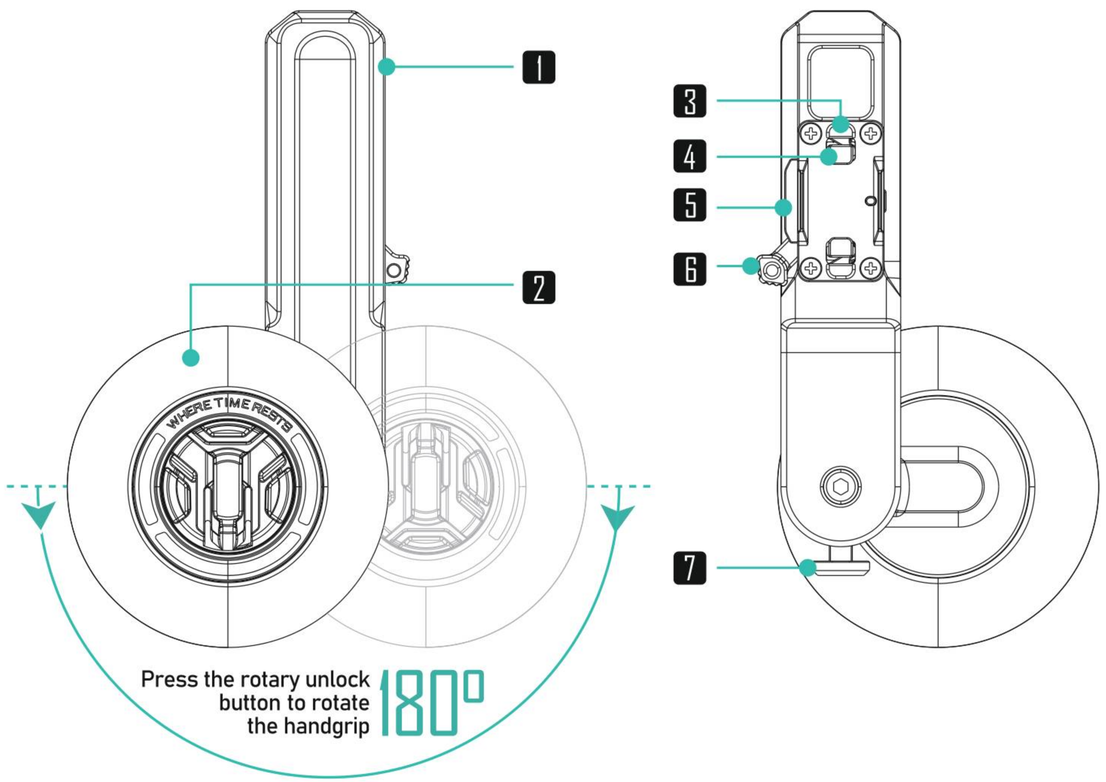

1 NATO Rail	4 Clamp
2 Handgrip	5 Clamp unlock button
3 Locating Pins	6 Locking Lever
	7 Rotary Unlock Button

ASSEMBLING THE NATO BRACKET WITH WOODEN HANDLE

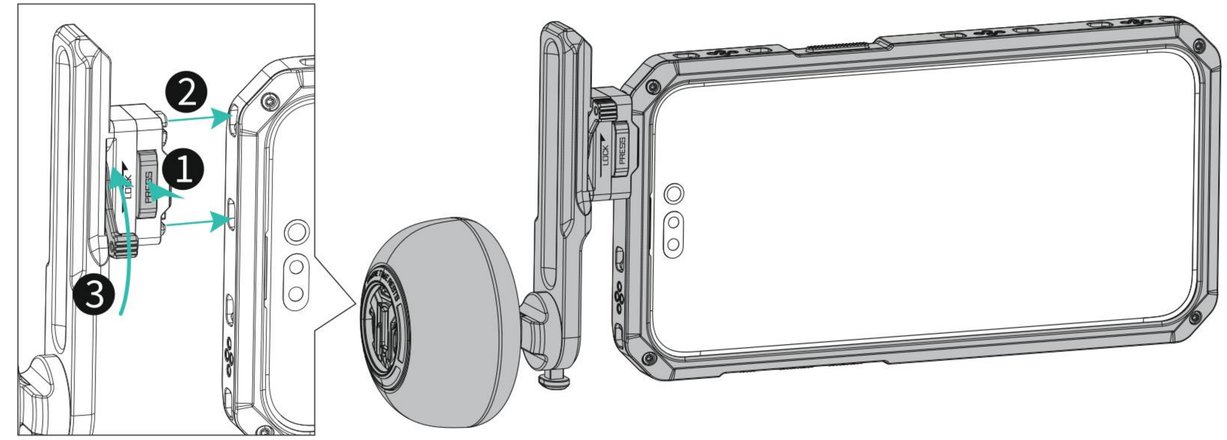

Press the clamp release button ①, attach the NATO Bracket with Wooden Handle to the quick-release mounting points ② of the phone case , and then lock the lever ③ to complete the assembly.

MOUNTING NUCLEUS NANO II HAND WHEEL CONTROLLER

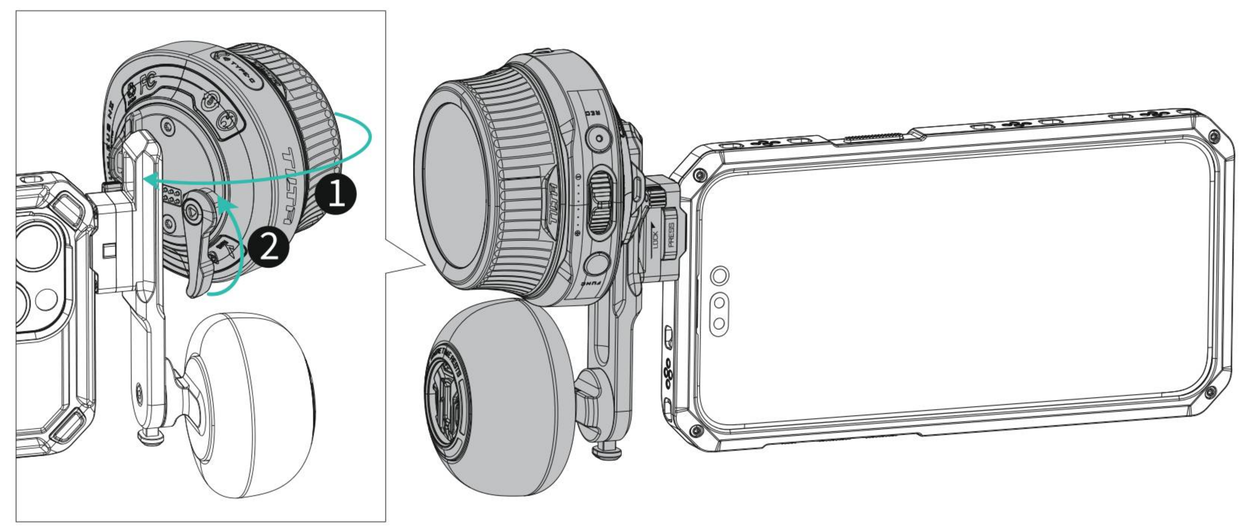

As shown, mount the hand wheel onto the NATO Bracket with Wooden Handle's NATO rail ① and lock the lever on the wheel ② to complete the assembly.

15 ASSEMBLING QUICK RELEASE ADAPTERS (OPTIONAL)

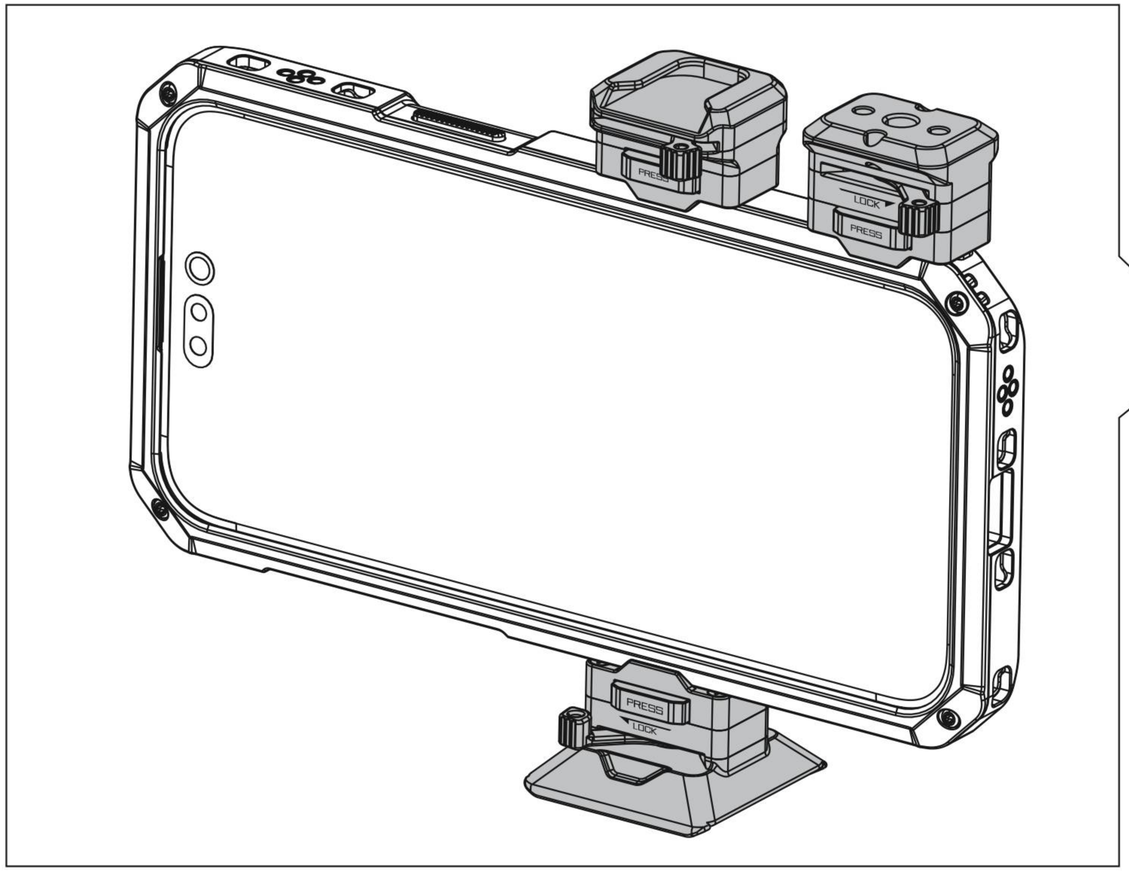

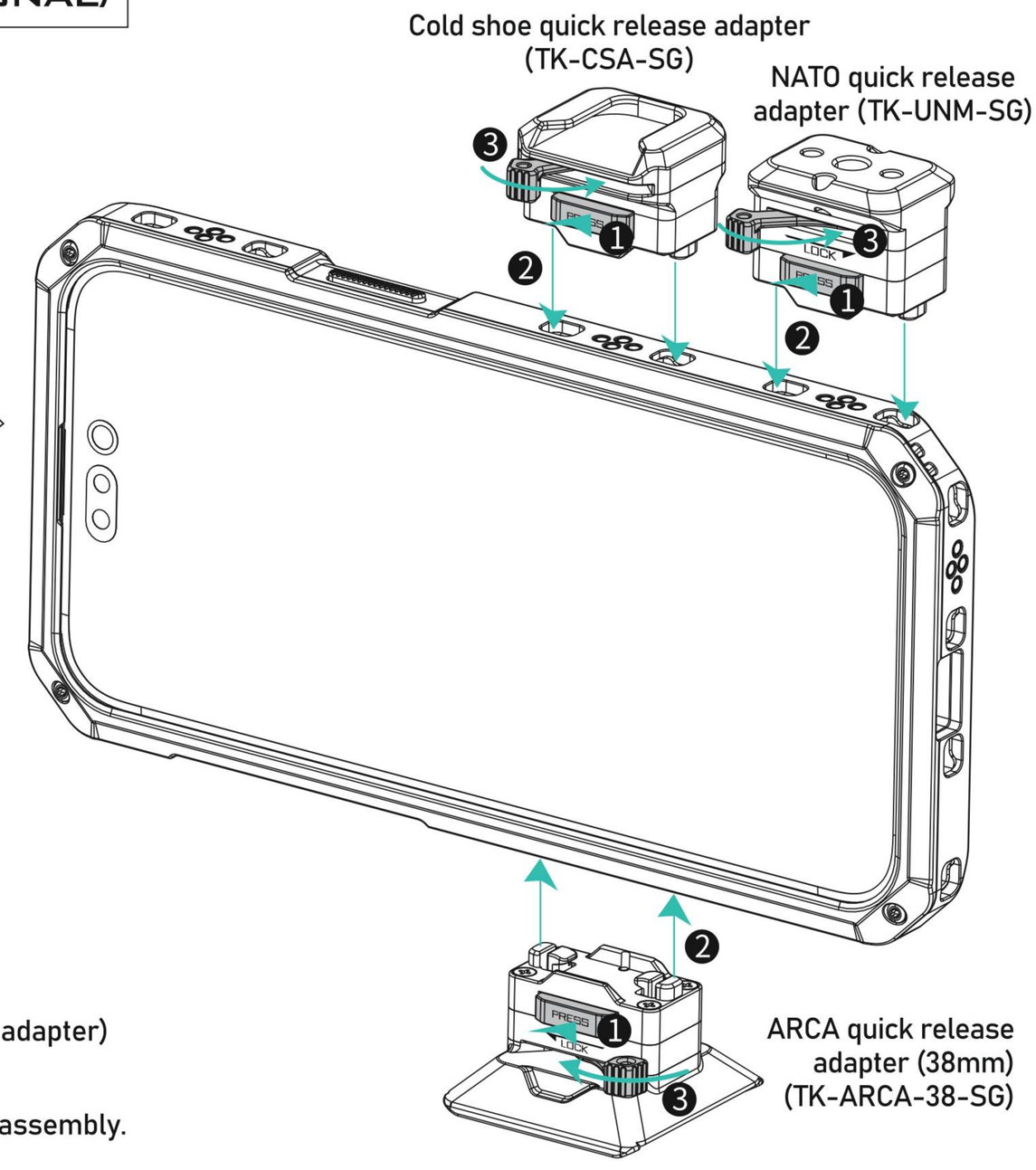

Assembling the universal quick-release adapter

(Cold shoe quick release adapter / NATO quick release adapter / ARCA quick release adapter)

Press the release button ① on the quick-release adapter, attach the adapter to the quick-release mounting points ② on the case, then lock the lever ③ to complete the assembly.

MEET THE KHRONOS ADJUSTABLE HANDLE (OPTIONAL)

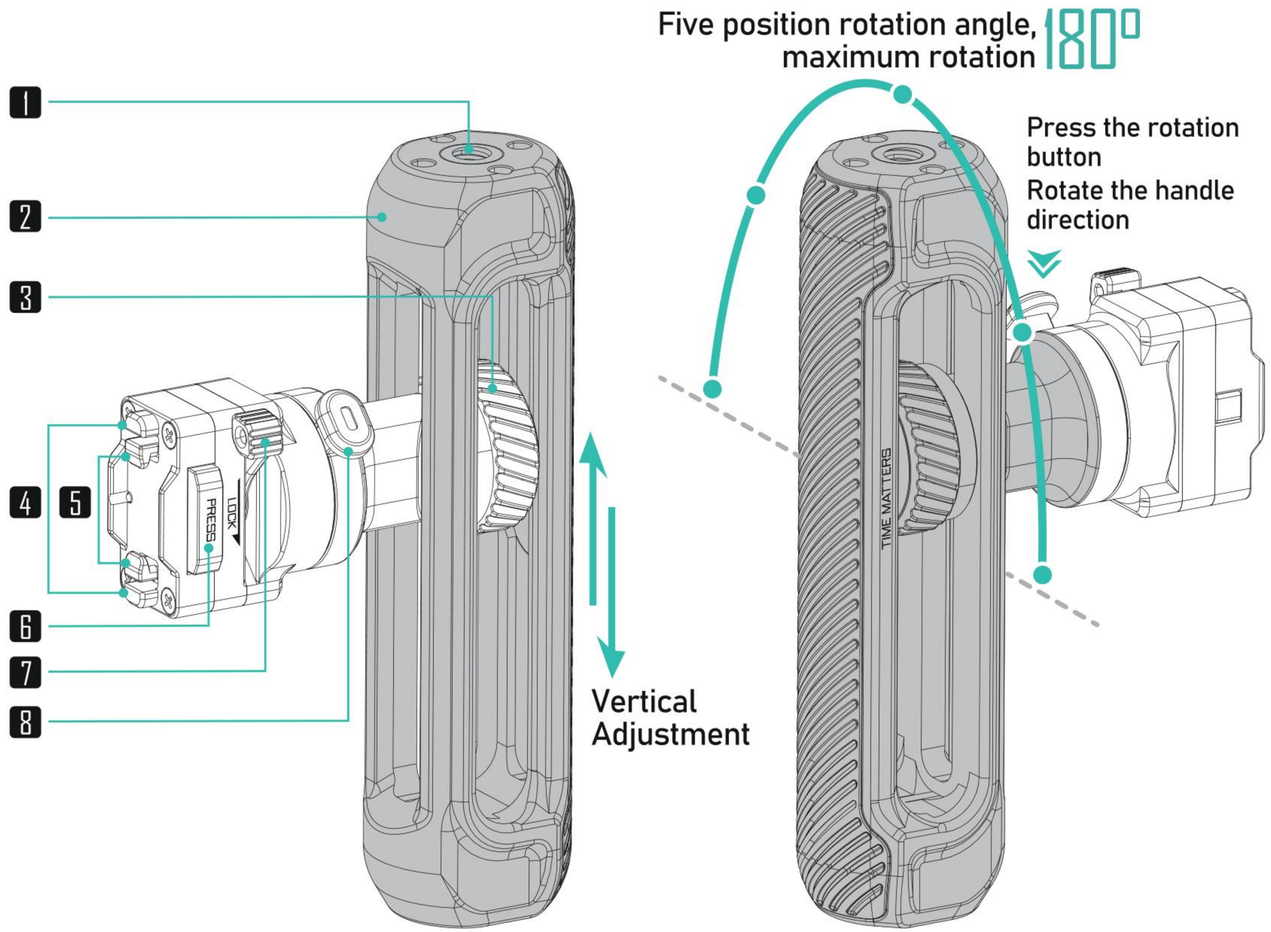

1 1/4"-20 Thread with Locating Points

2 Handle

3 Position Knob
(Secures the handle's vertical adjustment)

4 Locating Pins

5 Clamp

6 Release Button

7 Locking Lever

8 Rotation Button
By pressing the rotation button, the handle can rotate within a range of +90° to -90° (featuring 5 positions at 45° increments)

ASSEMBLING THE ADJUSTABLE HANDLE

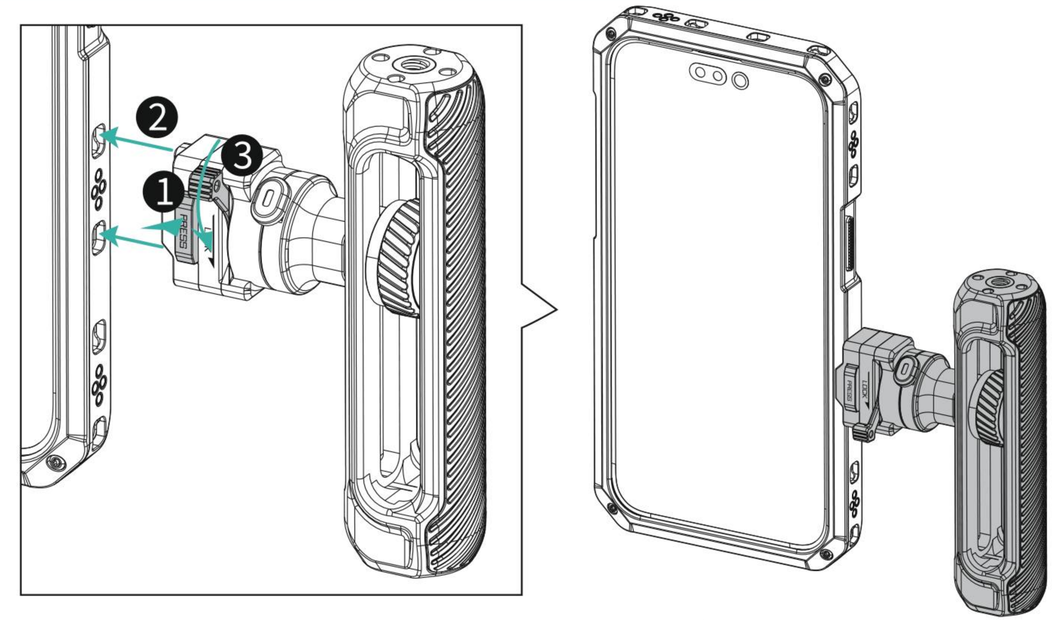

Press and hold the release button on the handle ①, attach the handle to the quick-release mounting points of the phone case ②, lock the lever ③ and complete the assembly.

Horizontal Shooting Mode

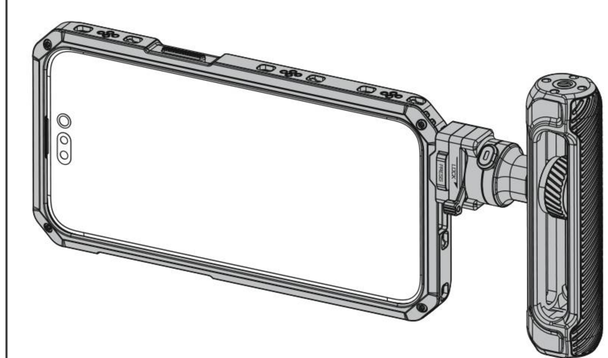

Vertical Shooting Mode

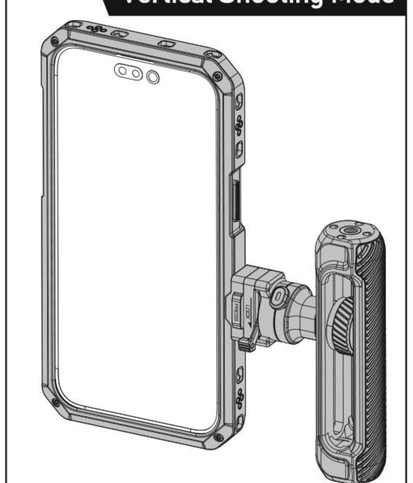

MEET THE MINI LED PANEL / CIRCULAR WOODEN HANDLE / UNIVERSAL SSD HOLDER (OPTIONAL)

MINI LED PANE

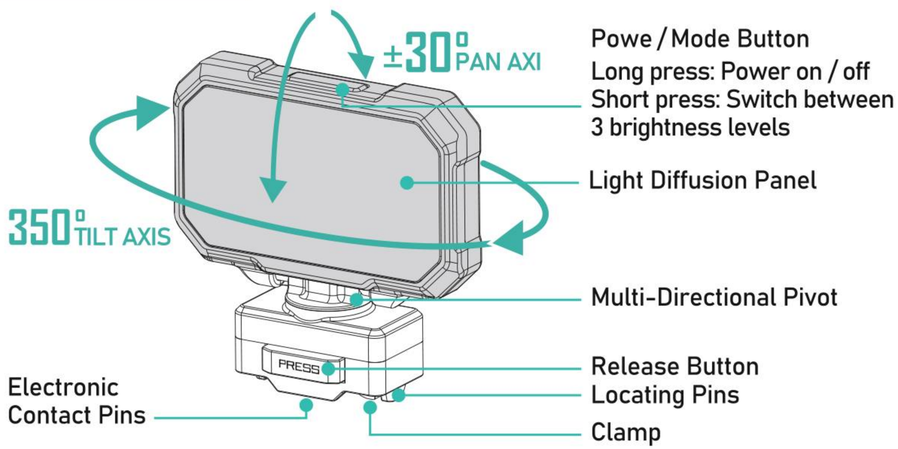

Dimensions: 53×52×17.6mm	Color Temperature: 6500±300K
Material: Aluminum Alloy / SUS304 / Silicone / Rubber / Graphite Nylon / PC	Luminous Flux: 67.9lm (level 1), 94.1lm (level 2), 129.2lm (level 1)
Weight: 36.5g	Power: ⩽2W
Colors: Space Gray / Titanium White	Voltage: 6-12V compatible
LED Color: White	Current: 0.16A at 6V (level 1), 0.16A at 6V (level 2), 0.35A at 6V (level 3)
Number of LEDs: 32pcs	
Illumination Distance: ⩾5m	Surface Temperature Increase (at ambient 24°C): by 33.6°C (level 1), 36.5°C (level 2), 41°C (level 3)
Color Rendering Index (CRI): ⩾95RA	

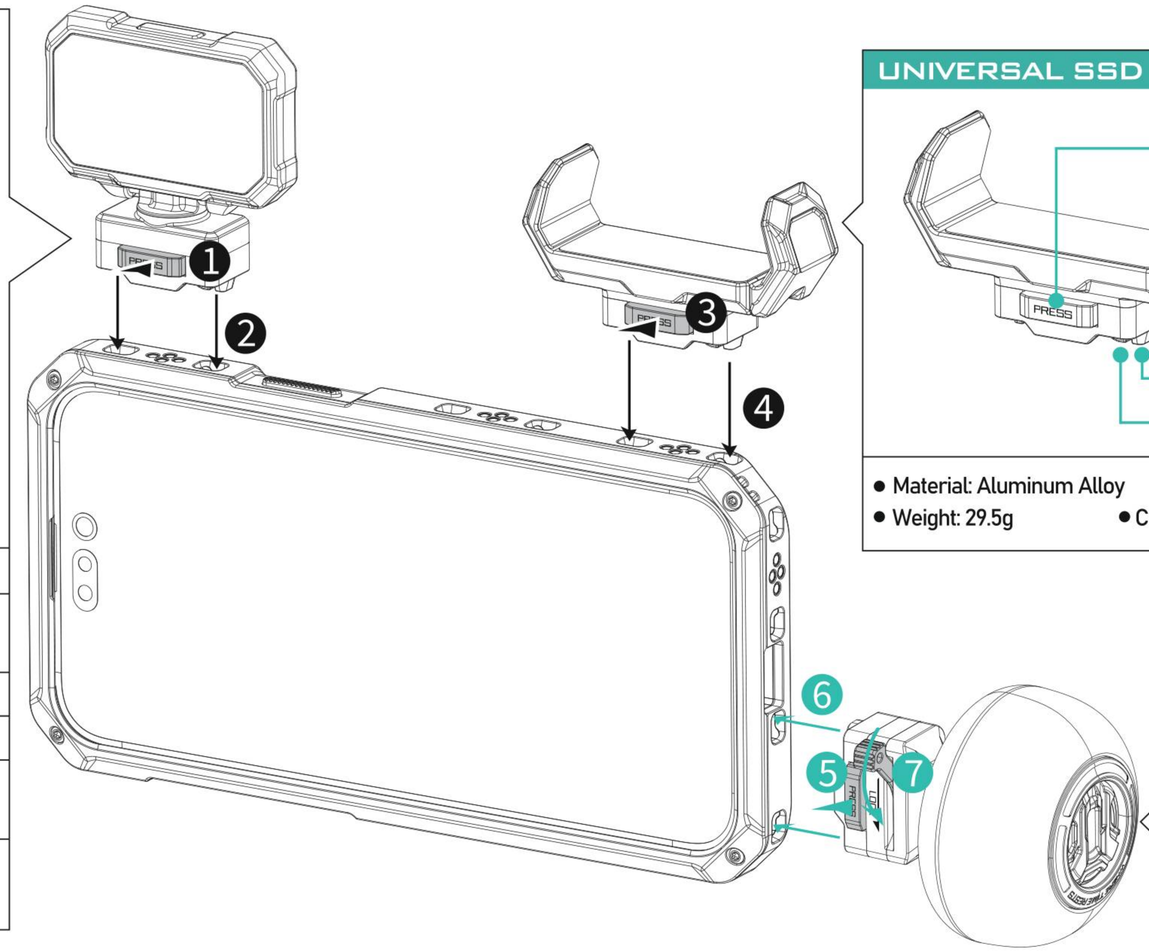

UNIVERSAL SSD HOLDER

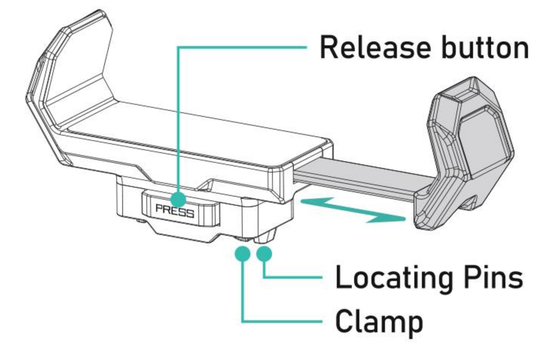

- Material: Aluminum Alloy
- Dimensions: 60.25×20×30.26mm
- Weight: 29.5g
- Colors: Space Gray / Titanium White

CIRCULAR WOODEN HANDLE

- Material: Aluminum Alloy
- Dimensions: 63.1×55.8×55.8mm
- Weight: 110g
- Colors: Space Gray / Titanium White

Assembling the MINI LED PANEL(TK-MLP-DL-SG)

Press the release button ① on the light, then mount the light onto the case with the quick-release mounting points ② equipped with dual electronic contacts (as shown), completing the assembly. Long press the power button to activate.

Assembling the Universal SSD Holder (TK-USH-SG)

Press the release button ③ on the SSD holder, then mount the holder onto a quick-release mounting points ④ on the case (as shown), completing the assembly.

Assembling the CIRCULAR WOODEN HANDLE (TK-CWH-SG)

Press the release button ⑤ on the circular wooden handle, then mount the handle onto the case with the quick-release mounting points ⑥ (as shown), and lock the lever ⑦ to complete the assembly.

ASSEMBLING THE IPHONE LENS ADAPTER (OPTIONAL)

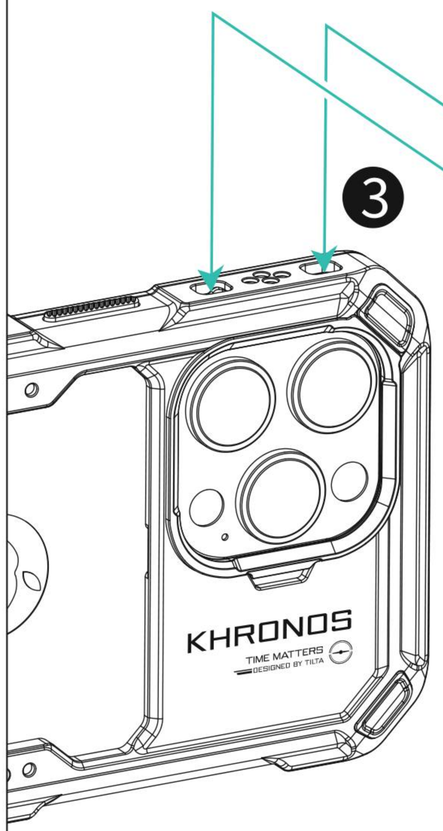

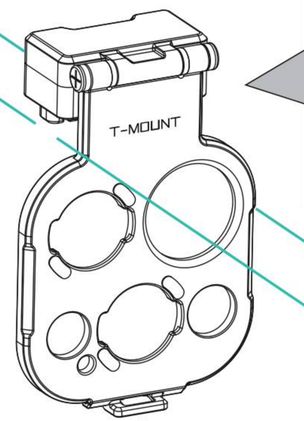

T-mount Lens Adapter
(TK-IP-TLA-SG)

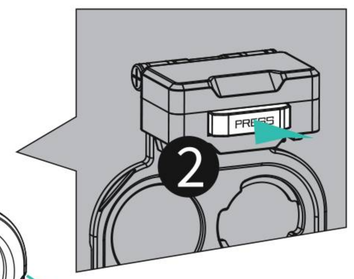

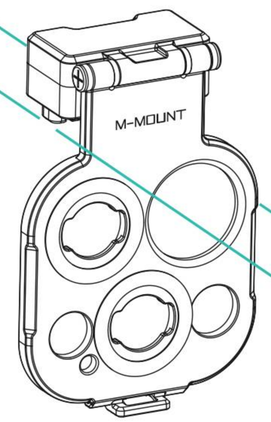

M-mount Lens Adapter
(TK-IP-MLA-SG)

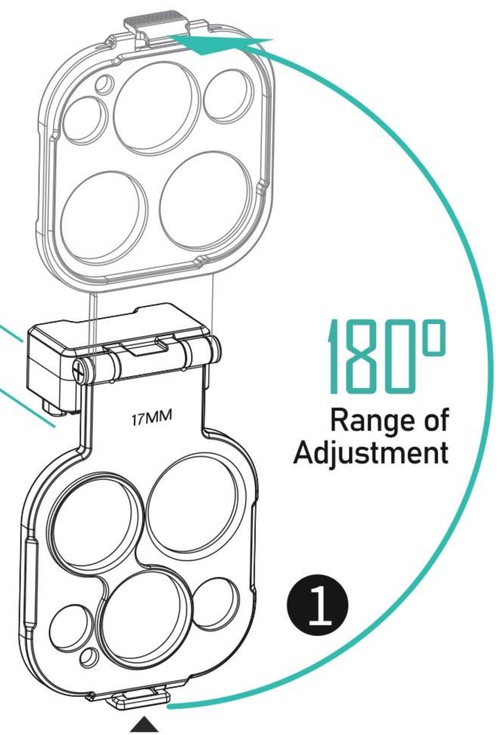

17mm-mount Lens Adapter
(TK-IP-17LA-SG)

Assembling the iPhone Lens Adapter

After adjusting the lens mount adapter to the appropriate angle ①, press the release button on the lens adapter ② and attach it to the quick-release mounting points ③ on the case as shown in the illustration, then press the anti-rotation clip of the adapter ④ into the anti-rotation slot on the phone case to secure the adapter and complete the assembly.
(The lens adapter allows for 180° angle adjustment.)

NOTE The KHRONOS T-mount lens adapter (TK-IP-TLA-SG) is only compatible with T-mount phone lenses from Fotorgear.

NOTE

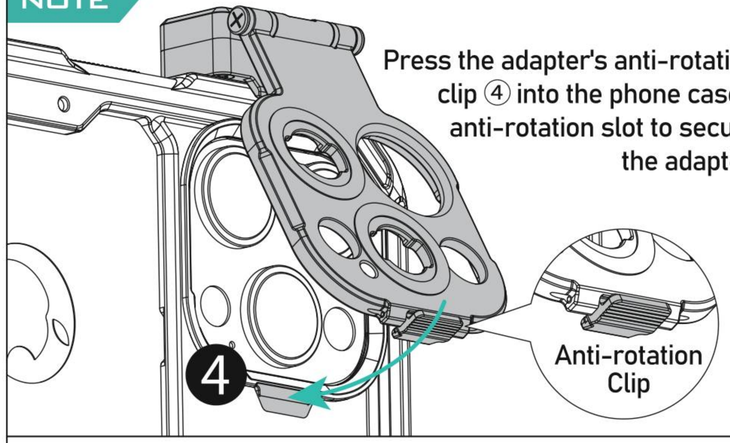

Press the adapter's anti-rotation clip ④ into the phone case's anti-rotation slot to secure the adapter.

AFTER ASSEMBLY — UNLOCKING THE ANTI-ROTATION CLIP

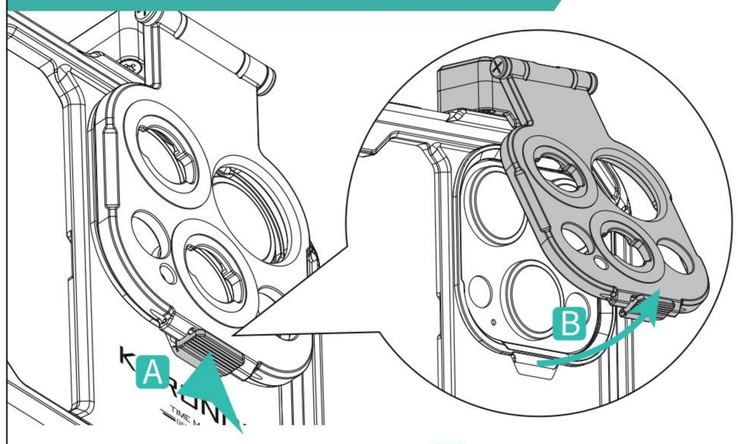

Hold the anti-rotation clip A to unlock and adjust the adapter's angle of rotation B.

19 ASSEMBLING KHRONOS QUICK RELEASE FILTER TRAY FOR IPHONE/ KHRONOS MAGNETIC BLACK MIST FILTER FOR IPHONE (OPTIONAL)

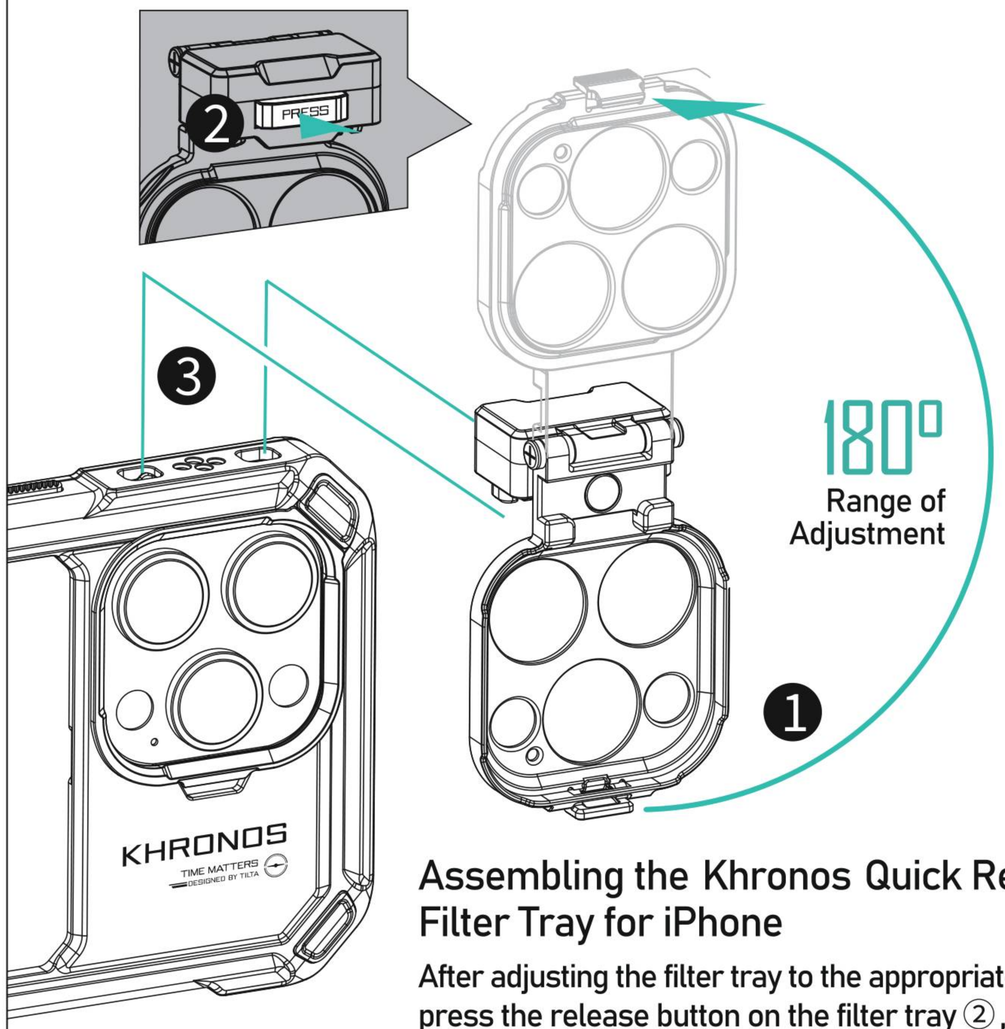

Assembling the Khronos Quick Release Filter Tray for iPhone

After adjusting the filter tray to the appropriate angle ①, press the release button on the filter tray ②, attach it to the designated quick -release mounting points ③ on the case as shown in the illustration, and press the filter tray's anti-rotation clip ④ into the phone case's anti-rotation slot to secure the adapter to complete the assembly.
(The lens adapter allows for 180° angle adjustment.)

NOTE

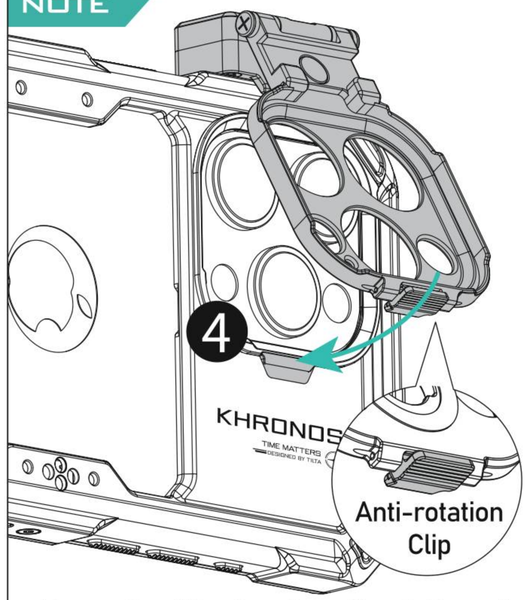

Press the filter tray's anti-rotation clip ④ into the phone case's anti-rotation slot to secure the filter tray.

AFTER ASSEMBLY — UNLOCKING THE ANTI-ROTATION CLIP

Hold the anti-rotation clip A to unlock and adjust the angle of the filter tray B.

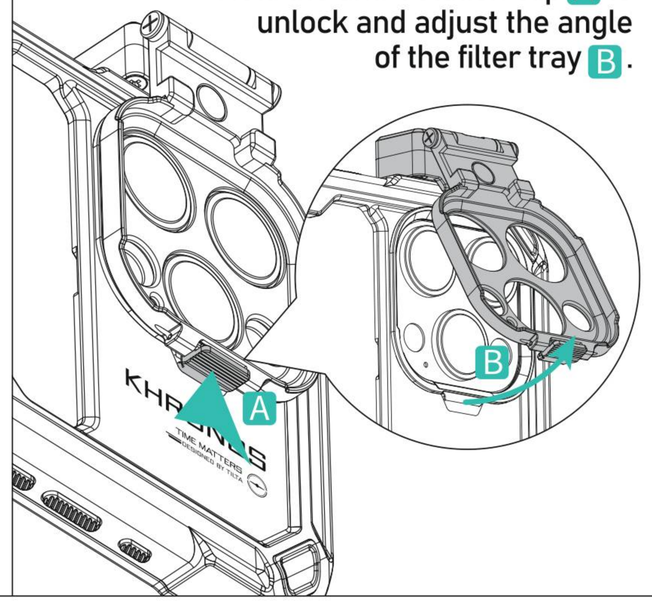

Assembling the iPhone Filter

Align the filter with the guide slot A on the filter holder, magnetically attach the filter B to the filter holder, and complete the assembly.

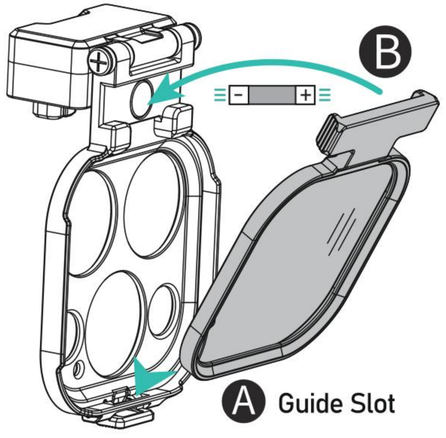

免责声明

感谢您购买KHRONOS的产品。

使用本产品之前,请仔细阅读本文以确保已对产品进行正确的设置。本文档及本产品所有相关的文档最终解释权归KHRONOS所有。如有更新，请访问www.tilta.com官方网站获取最新的产品信息。KHRONOS保留随时修改本手册中任何信息的权利，无需提前通知且不承担任何责任。

一旦使用本产品,即视为您已经仔细阅读免责声明与警告，理解、认可和接受本声明全部条款和内容。您承诺对使用本产品以及可能带来的后果负全部责任。您承诺仅出于正当目的使用本产品，并且同意本条款以及KHRONOS制定的任何相关条例、政策和指引。

KHRONOS对于直接或间接使用本产品而造成的损坏、伤害以及任何法律责任不予负责。用户应遵循包括但不限于本文提及的所有安全指引。

即使存在上述规定，消费者权益依然受当地法律法规所保障，并不受本免责声明影响。

使用本产品前，请严格遵守以下说明，如因失误操作或者不正当使用等造成的相关后果，KHRONOS不负任何责任。

配件知悉

- 部分产品套装内包含KHRONOS iPhone系列跟焦供电侧手柄(TK-IP-PH-SG)，手柄内置 **7.4V 37Wh 5000mAh** 锂电池。
- KHRONOS iPhone系列手机卡包、散热器(TK-IP-CS-SG)(选配)可磁吸到iPhone手机上。
- KHRONOS iPhone系列散热器(TK-IP-CS-SG)(选配)在工作状态中会产生轻微发热，此为正常现象。

配件要求

- 充电环境温度高于40°C或低于5°C可能导致电池性能下降、膨胀、漏液、过热等损坏。
- 切勿将手柄电池存储在超过60°C的环境下。理想的存储环境温度为 22°C至28°C。

操作环境

- 请在温度为 -20°C至45°C之间的环境中使用电池。温度过高将会引起电池异常膨胀、着火，甚至爆炸。在低温环境下使用之前，建议先在常温环境中将电池充满电量，以延长电池使用寿命。
- 请勿将设备放置在易燃、可燃物（如地毯和木制品）附近充电。请时刻留意充电过程，谨防发生意外。
- 请在干燥的环境下存储设备，理想的设备存放环境湿度不高于 40%。

电池安全

⚠【警告】

- iPhone系列跟焦供电侧手柄(TK-IP-PH-SG)配有不可拆卸的内置电池，请勿自行更换电池，以免损坏电池或设备。
- 请勿将电池暴露在高温处或发热设备的周围，如日照、取暖器、微波炉、烤箱或热水器等。电池过热可能引起爆炸。
- 请勿拆解或改装电池、插入异物、或浸入水或其它液体中，以免引起电池漏液、过热、起火或爆炸。

电池安全

⚠【警告】

- 电池内部电解液具有强腐蚀性，如果不小心接触到皮肤或眼睛，请立即用清水冲洗至少 15 分钟并马上就医。
- 请勿把电池扔到火里，否则会导致电池起火和爆炸。
- 请勿跌落、挤压或穿刺电池。避免让电池遭受外部大的压力，从而导致电池内部短路和过热。
- 请勿使用已经损坏的电池。
- 切勿将电池彻底放完电后长时间存储，以避免电池进入过放状态而造成电芯损坏，将无法恢复使用。
- 务必将电池彻底放电后，再将电池废置于指定的电池回收箱。电池是危险化学品，严禁弃置于普通垃圾箱。相关细节，请遵循当地电池回收和废置的法律法规。如电池无法彻底放电，请勿将电池直接弃置于电池回收箱，应联系专业电池回收公司做进一步的处理。

维护和保养

- 请保持设备清洁，无沙尘等异物。使用干净、干燥的布料及时清理产品上的异物。
- 请勿使设备及其配件受到强烈的冲击或震动，以免损坏设备及其配件，导致设备故障。

23 认识KHRONOS iPhone 15 PRO/15 PRO MAX手机壳

KHRONOS iPhone 15 Pro专用手机壳

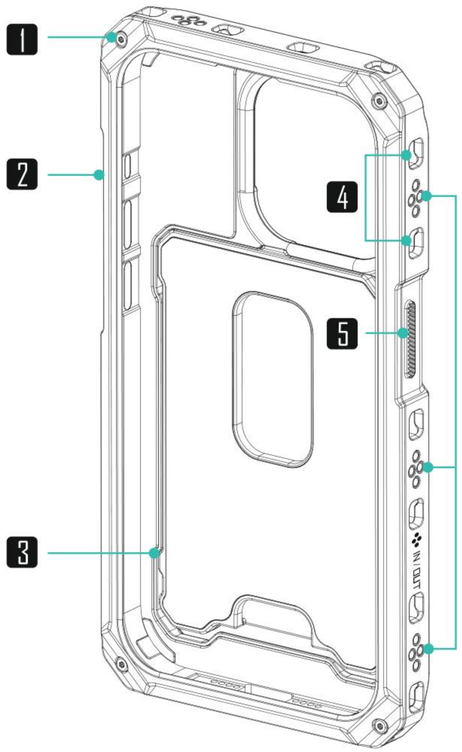

<正面>

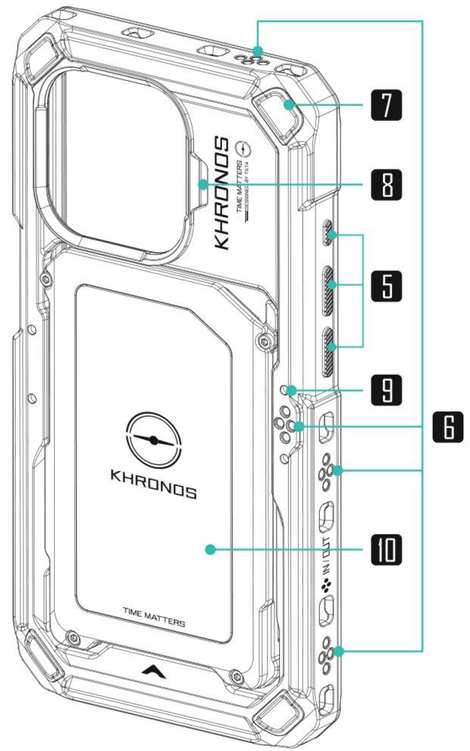

<背面>

规格参数

- 材质:铝合金+塑胶+硅胶
- 尺寸:156.6×80.6×14mm
- 重量:69.5g(手机壳)/127.5g(手机壳+卡包)
- 颜色配置:深空灰/钛白色

<底部>

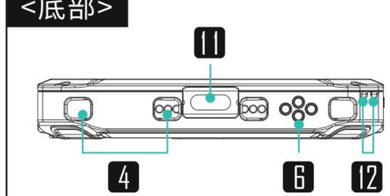

1 手机壳固定螺丝(M2螺丝)

2 手机壳上盖

3 卡包安全扣

4 配件快拆接口

5 手机按键

6 双向电子触点

7 保护胶垫

8 镜头防偏转槽

9 散热器定位孔

10 手机卡包

11 Type-C预留口

12 挂绳孔

KHRONOS iPhone 15 Pro Max专用手机壳

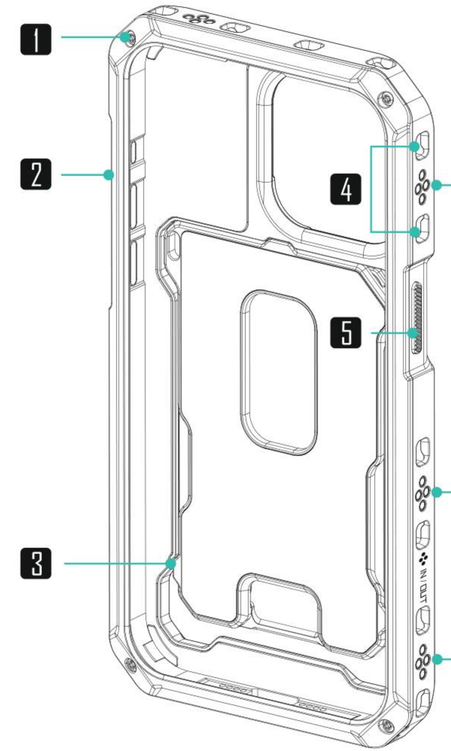

<正面>

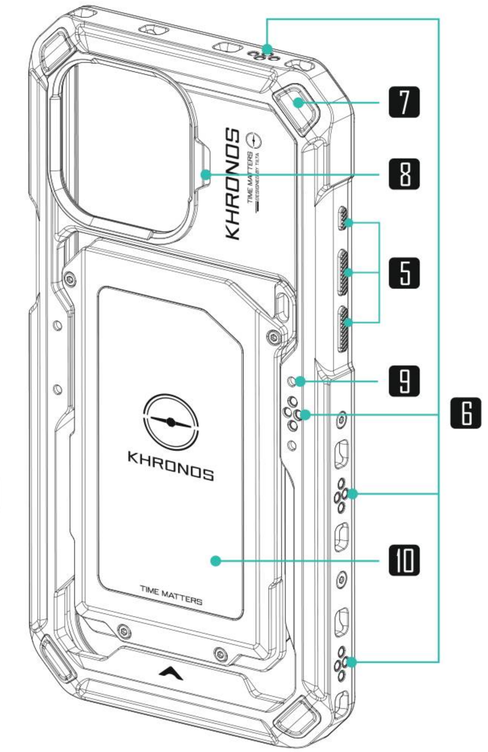

<背面>

规格参数

- 材质:铝合金+塑胶+硅胶
- 尺寸:169.8×86.8×14mm
- 重量:83g(手机壳)/138g(手机壳+卡包)
- 颜色配置:深空灰/钛白色

<底部>

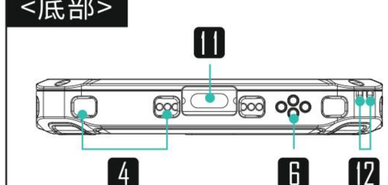

装配KHRONOS iPhone 15 PRO/15 PRO MAX手机壳

以KHRONOS iPhone 15 Pro Max专用手机壳为例，
将手机放在手机壳里①，再通过M2螺丝将上盖②
锁紧在手机壳上，完成装配。

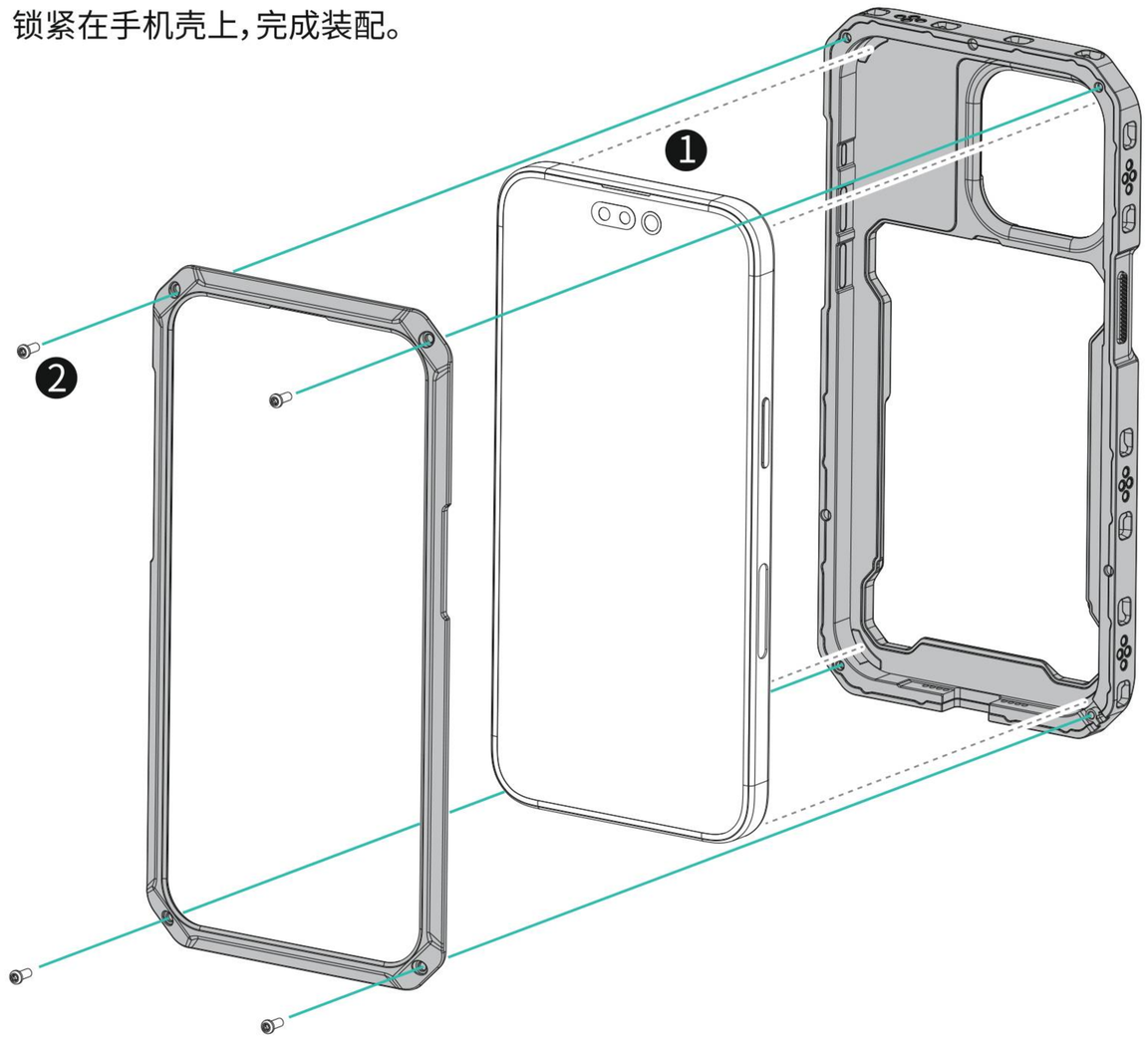

装配手机卡包

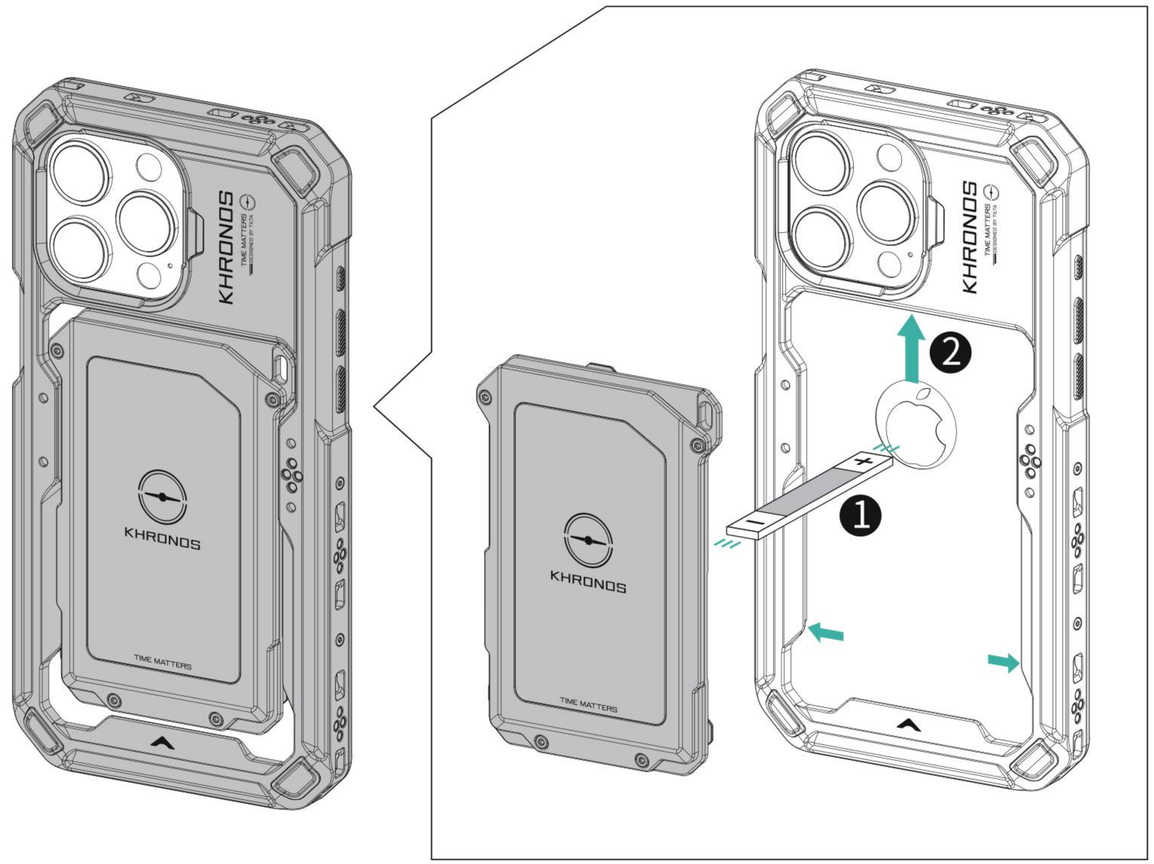

以KHRONOS iPhone 15 Pro Max专用手机壳的卡包为例，
将卡包磁吸到手机壳背面①后，向上推动卡包②嵌入手机壳的卡包安全扣中，
完成装配。

认识iPhone系列散热器(选配)

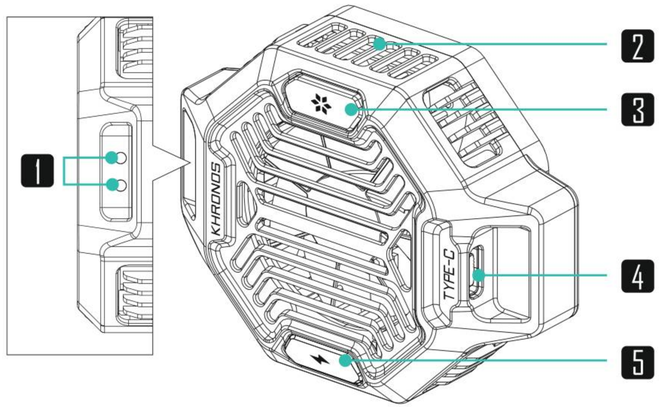

<正面>

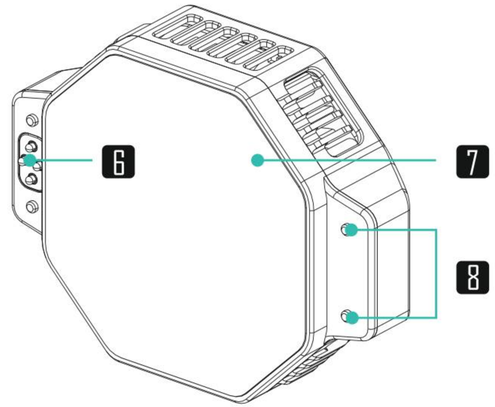

<背面>

1 功能指示灯
2 散热孔
3 制冷功能按键
4 Type-C接口(PD输入27W)
5 无线充电功能按键
6 电子弹针(输入6-12V)
7 制冷面板
8 定位柱

散热器不含电池,无内置电池,使用时需外接电源供电。

规格参数

- 材质:铝合金
- 尺寸:77.6×58.4×25.5mm
- 重量:106.5g
- 颜色配置:深空灰/钛白色

按键说明

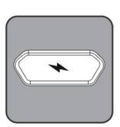

无线充电功能按键

1档(单击):输出5W,指示灯为白色

2档(再次单击):输出10W,指示灯为亮白色

制冷功能按键

1档(单击):普通制冷,指示灯为蓝色

2档(再次单击):极寒制冷,指示灯为深蓝色

装配散热器

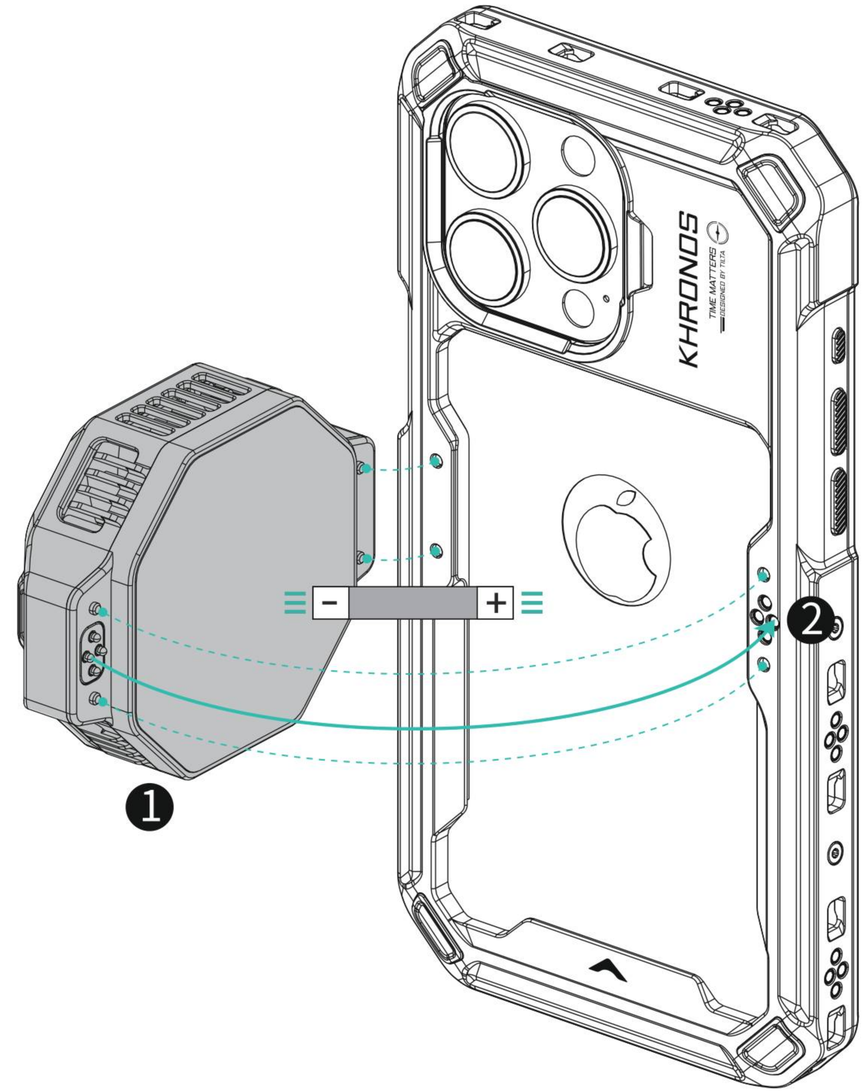

以KHRONOS iPhone 15 Pro Max专用手机壳为例,将散热器①对准手机壳背面的散热器定位孔和触点②后,磁吸到手机背面,完成装配。

散热器外接电源供电说明

Type-C接口供电

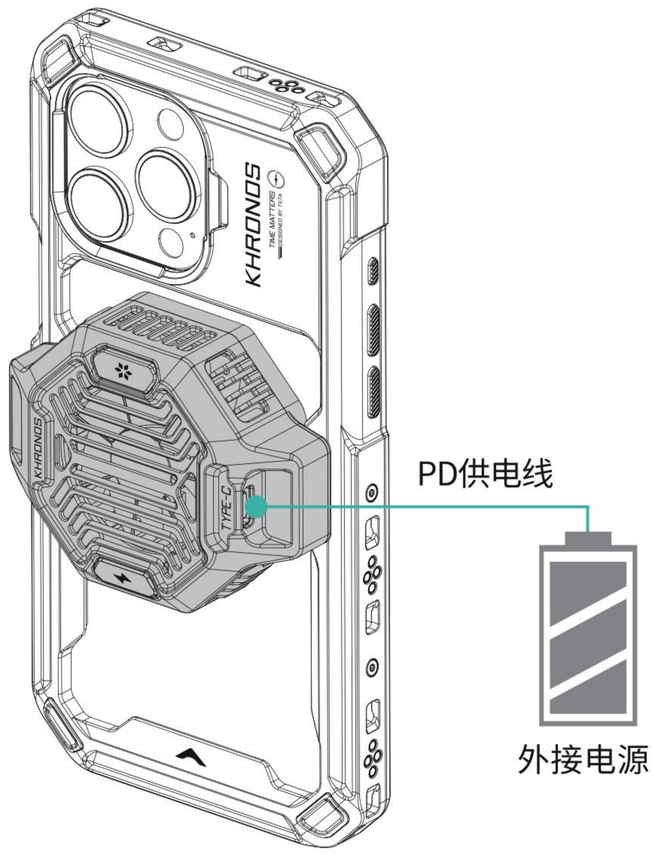

< 带手机壳状态 >

散热器的Type-C接口外接电源给散热器和手机壳供电(同时也通过MagSafe给手机供电)

触点供电

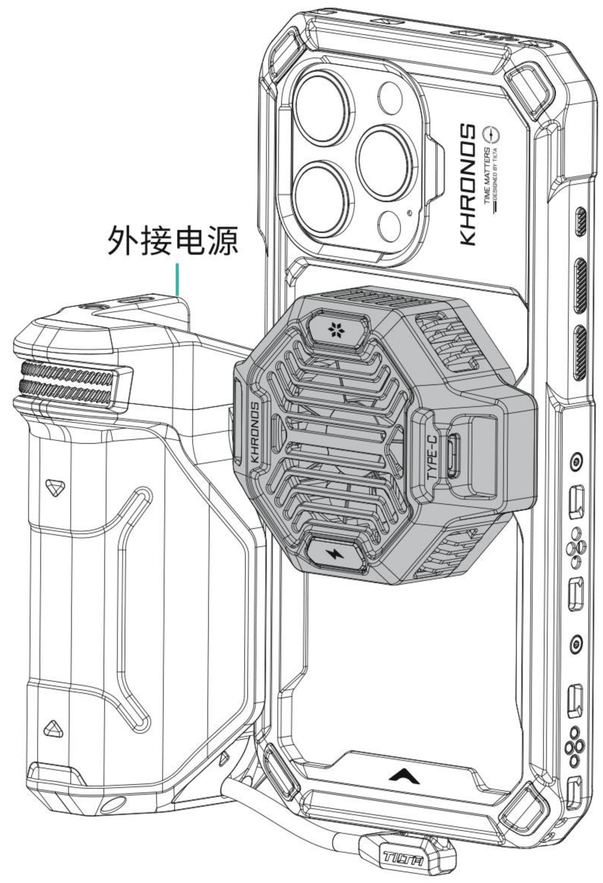

< 带手机壳状态 >

跟焦供电手柄通过触点给手机壳和散热器供电。

MagSafe供电

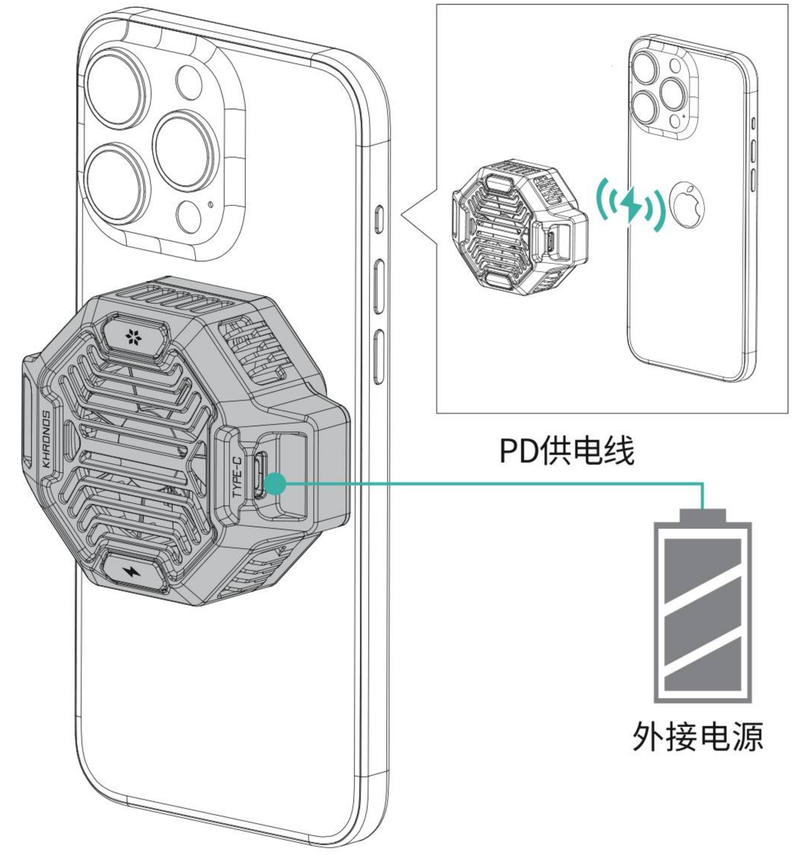

< 裸机状态 >

散热器的Type-C接口外接电源给散热器供电，同时也通过MagSafe给手机供电。

认识iPhone系列跟焦供电侧手柄(选配)

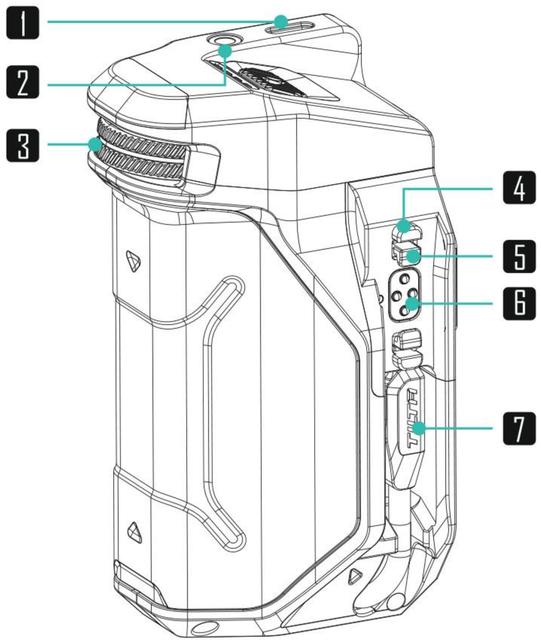

<正面>

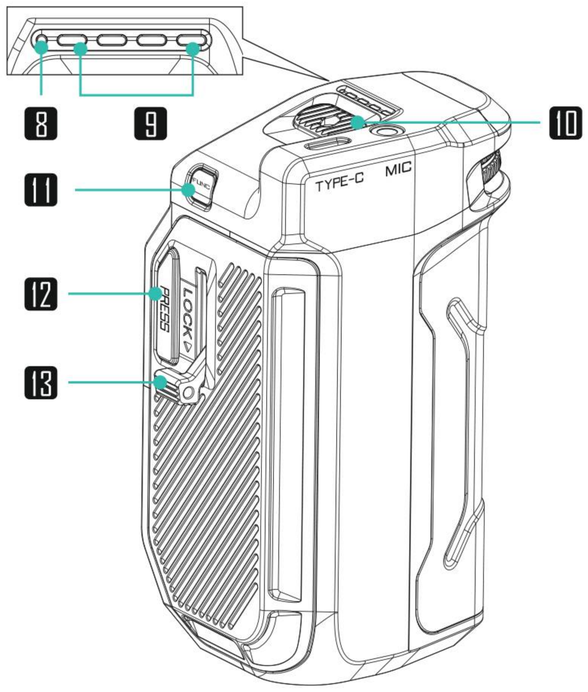

<背面>

1 Type-C电源接口(PD输入输出双向快充)
2 3.5mm麦克风接口
(适用三环四节的3.5mm音频插头)
3 拨轮
4 定位柱
5 卡扣
6 电子弹针
7 Type-C供电线(仅支持输出)(线长约70mm)
8 状态指示灯
9 电源指示灯
10 电源/录制按键
11 功能键
12 卡扣解锁按键(按压解锁)
13 锁紧扳扣

规格参数

- 材质：铝合金+SUS304+硅胶+ABS+PC
- 颜色配置：深空灰/钛白色
- 尺寸：103.8×49×65.1mm
- 重量：300g

功能说明

功能键

01 单击：切换Blackmagic Cam APP 里ZOOM和FOCUS功能
02 双击：切换蓝牙HID模式和APP模式
（HID模式：控制原生相机；APP模式：控制Blackmagic Cam APP）
03 长按：切换打开/关闭Type-C供电线给手机供电
04 三击：清除通过HID和APP模式已配对的手机。清除完成，状态指示灯红绿灯交替闪烁3S。（清除后，已配对的手机无法自动回连手柄，需要手机忽略已配对的手柄，重新配对。）

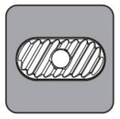

电源/录制键

01 长按3秒：开/关机
02 单击：在HID模式下，若当前是拍照界面，单击为拍照；若当前是录像界面，单击为录像。在APP模式下，单击为录像。

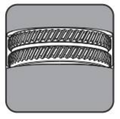

拨轮

01 APP模式：可控制Blackmagic Cam APP的变焦和跟焦
02 HID模式：可控制部分安卓手机原生相机的变焦

状态指示灯灯语

长按3秒【电源/录制键】开机—— /红灯或绿灯亮起
双击【功能键】切换模式—— APP模式（红灯常亮）或HID模式（绿灯常亮）
三击【功能键】清除已配对设备——红绿灯交替闪烁3秒
蓝牙连接成功——红灯闪烁（APP模式）或绿灯闪烁（HID模式）
进入固件更新状态—— 黄灯亮起至闪烁

装配iPhone系列跟焦供电侧手柄

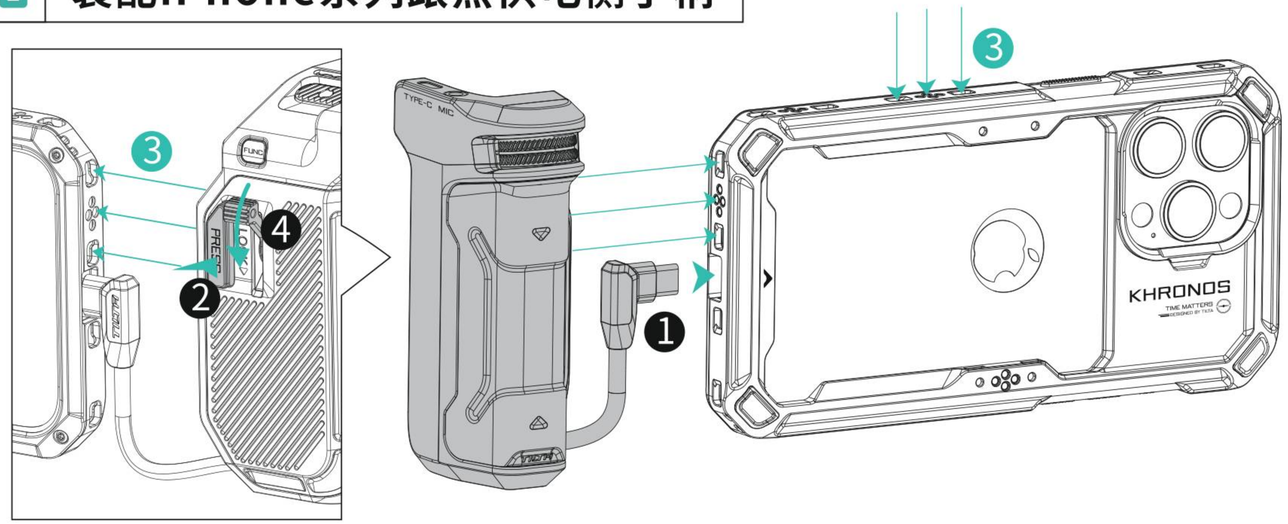

通过手柄自带的Type-C输出供电线给手机供电。
连接供电线①后，按压手柄的卡扣解锁按键②将手柄安装到手机壳的快拆接口③（如图）上，再锁紧扳扣④固定手柄。

横拍模式

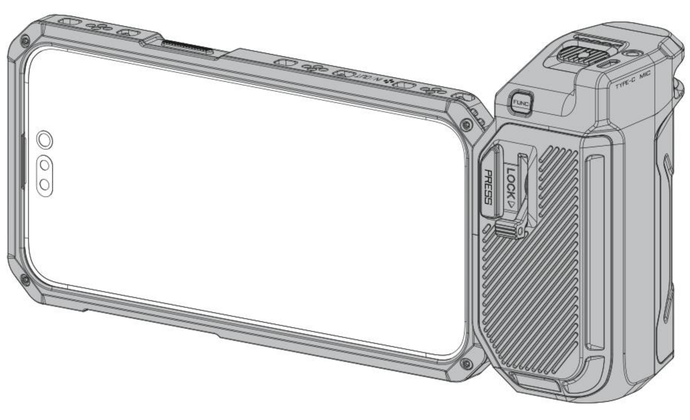

竖拍模式

使用须知

手柄电池容量
7.4V 37Wh 5000mAh

(1) 工作温度：充电：0°C～45°C；放电：-20°C～60°C
(2) 存储温度：-20°C～45°C
(3) 运行湿度：90-95%(Max.)
(4) 存储相对湿度：≤ 70%RH
(5) 质保期：12个月且循环次数少于200次

TYPE-C接口功率输入/输出范围
输入30W（开机状态下，最大输入5W；关机状态下，最大输入30W）
输出20W（开机状态，最大输出5W；关机状态，最大输出20W）

TYPE-C供电线功率输出范围
输出20W

固件更新

1. TILTA官网下载更新固件，如有安装疑问，可咨询铁头官方客服。（TILTA官网：www.tilta.com）
2. 手柄在关机状态下，长按【功能键】同时长按【电源/录制键】，待指示灯黄灯亮起至闪烁状态；
3. 使用数据线连接手柄Type-C接口至个人电脑，将下载好的更新固件移动到手柄盘符里即更新完成。

跟焦供电侧手柄——蓝牙连接说明

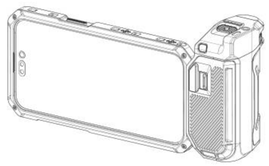

装配手柄

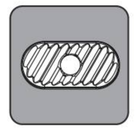

长按3秒【电源/录制键】开机

双击【功能键】切换模式

01 将手柄装配到手机后，长按3秒【电源/录制键】开机，待状态指示灯亮起。

双击【功能键】进入模式切换——APP模式（红灯常亮），HID模式（绿灯常亮）。

02 APP模式——控制Blackmagic Cam

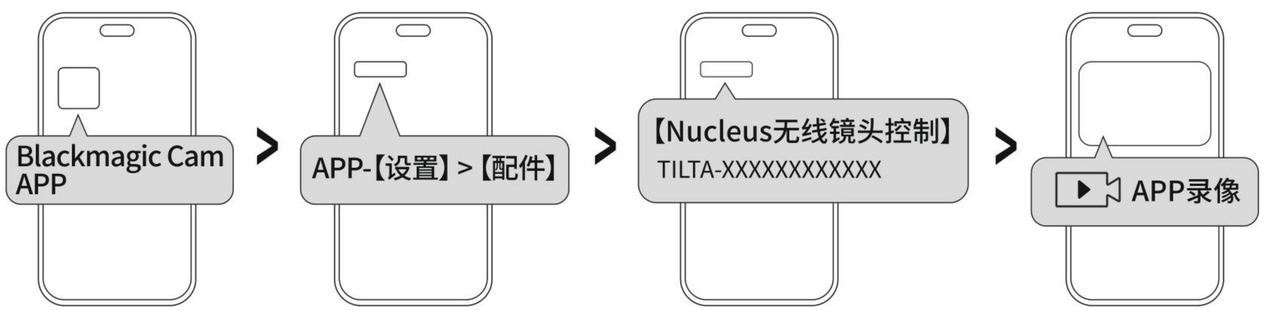

手柄在APP模式下，手机打开Blackmagic Cam APP，在APP【设置】>【配件】>【Nucleus无线镜头控制】列表里选择需要连接的手柄进入连接，待连接成功（红灯闪烁）后即可使用手柄【录制键】控制Blackmagic Cam APP的录像，【拨轮】控制Blackmagic Cam APP的变焦和跟焦。（手柄在APP模式下切换模式或重启后，需要在APP设置里重新手动连接手柄蓝牙。）

03 HID模式——控制原生相机

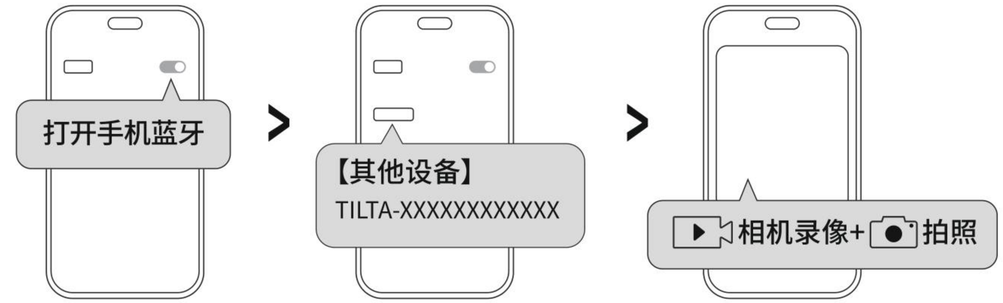

手柄在HID模式下，手机打开蓝牙，在【其他设备】列表里选择需要配对的手柄进入配对，待连接成功后（绿灯闪烁）即可使用手柄的【录制键】控制原生相机的录像和拍照，【拨轮】控制部分安卓手机原生相机的变焦。（当手柄在HID模式下并已连过手机蓝牙，再次打开手机蓝牙时，系统会自动连接手柄蓝牙。）

---

1. 可通过开机亮起红灯(APP模式)或绿灯(HID模式)了解手柄当前的模式。
2. 模式设置后重启，手柄会保存重启前设置好的模式。
3. HID和APP是两个不同的MAC地址，所以手柄在HID模式和APP模式下的蓝牙名称亦有差异。(如:APP模式下手柄蓝牙名称为TILTA-000000000001，则HID模式下蓝牙名称为TILTA-000000000002)
4. 手柄在HID模式下也可控制Blackmagic Cam APP 录像，打开APP【设置】>【摄像机】>使用音量按键触发记录。

认识手机壳通用拓展坞(选配)

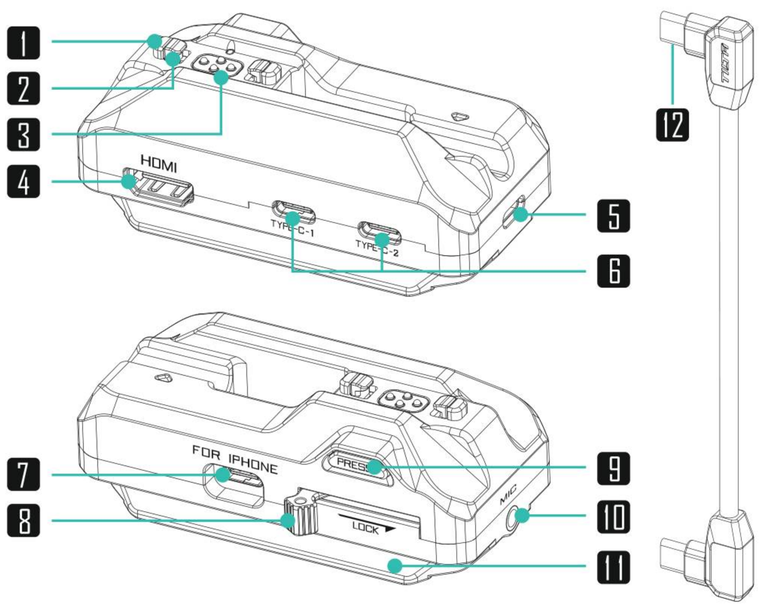

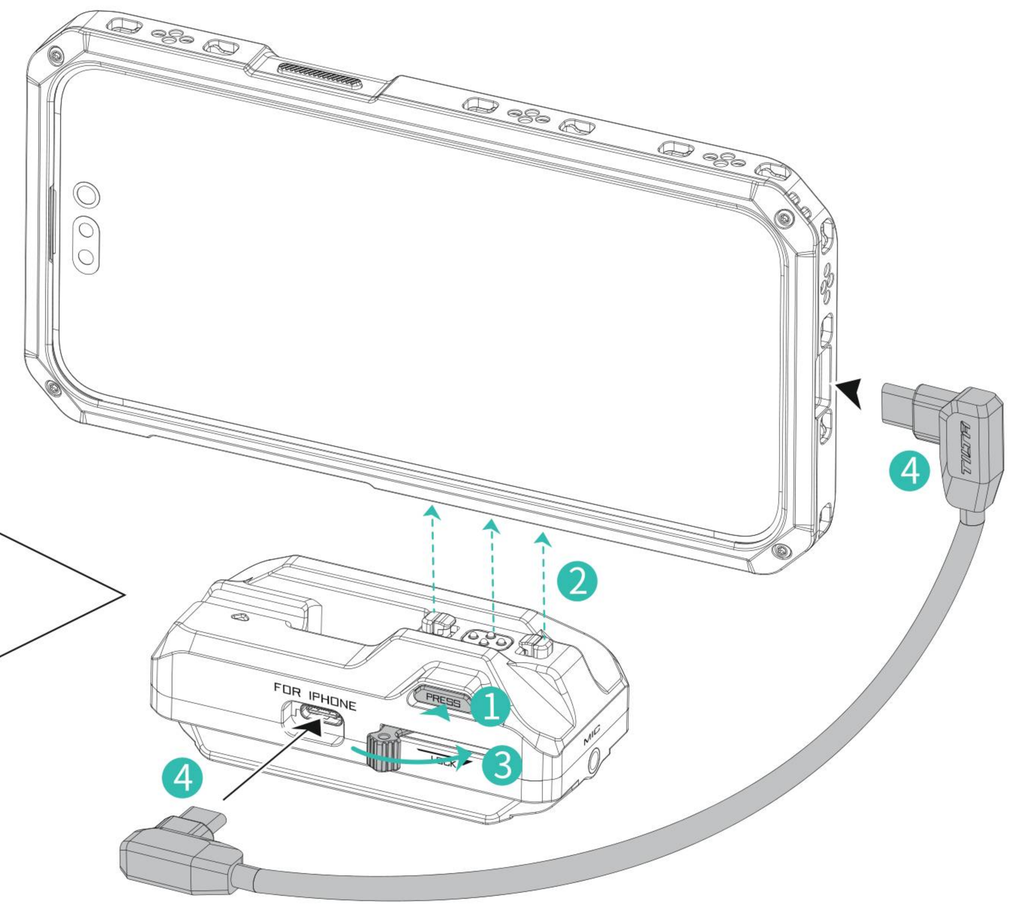

1 卡扣
2 定位柱
3 电子弹针
4 HDMI接口
5 Type-C输入电源接口
(外接电源，最大输入20V/5A 100W，支持PD 3.0协议)
6 Type-C数据传输接口
7 Type-C接口(上行口)(连接手机)
8 锁紧扳扣
9 卡扣解锁按键
10 3.5mm音频接口
(适用三环四节的3.5mm音频插头)
11 阿卡滑条
12 双弯头Type-C数据线

- 材质：铝合金
- 重量：99.5g
- 尺寸：53×52×17.6mm
- 颜色配置：深空灰/钛白色

拓展坞不含电池，无内置电池，使用时需外接电源通电。

装配通用拓展坞

(1) 按压拓展坞的卡扣解锁按键①，将拓展坞安装到手机壳上带双向电子触点的快拆接口②上，锁紧扳扣③完成装配。

(2) 将配置的双弯头Type-C数据线④两端连接到手机和拓展坞指定的Type-C接口上即可。

31 拓展坞外接电源供电说明

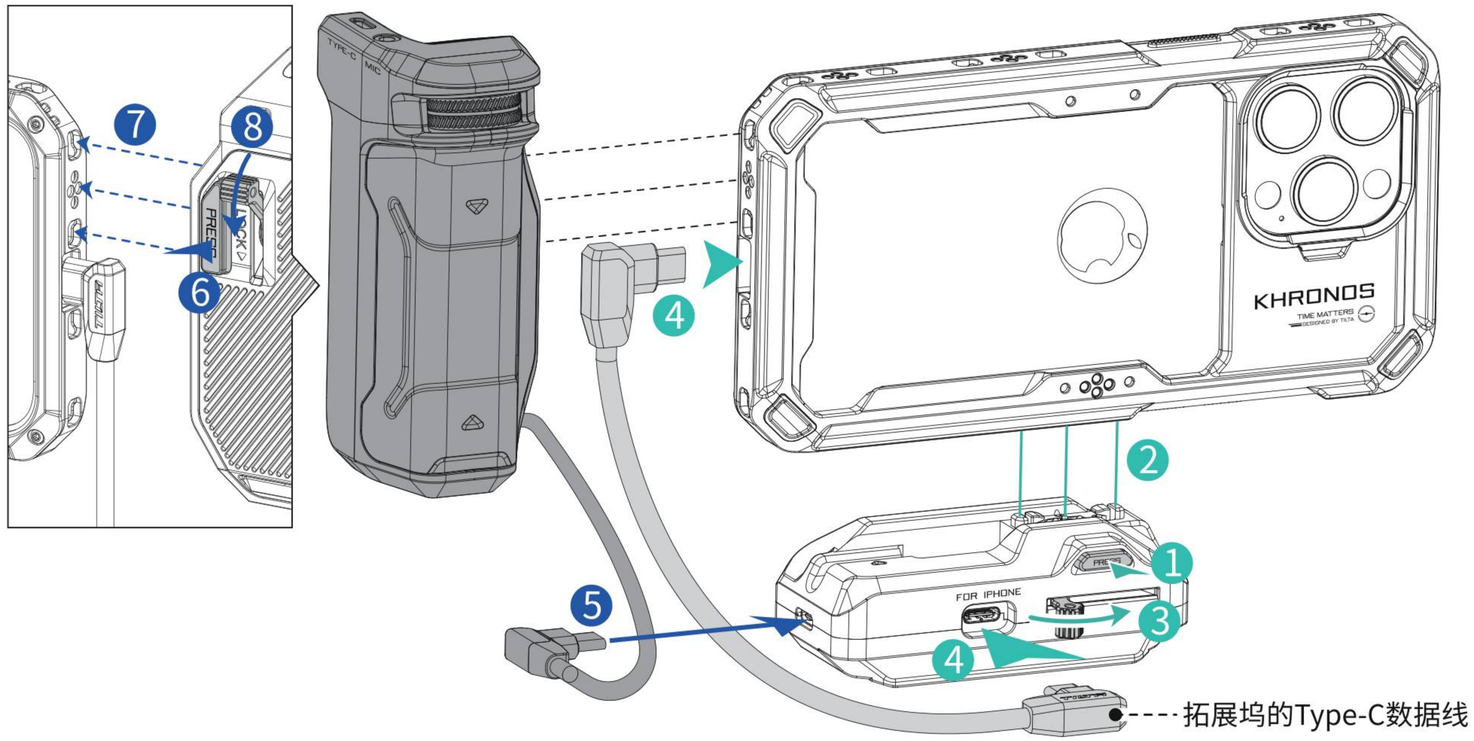

根据上篇所述的装配方式安装拓展坞（如图❶❷❸❹序号装配）后，可外接iPhone系列跟焦供电手柄或其他电源给拓展坞供电。

如图iPhone系列跟焦供电侧手柄——电源线供电

(1) 将手柄的Type-C供电线插入拓展坞的供电接口❺。

(2) 按压手柄的卡扣解锁按键❻，将手柄安装到手机壳带双向电子触点的快拆接口❼上，再锁紧扳扣❽固定手柄。

(3) 长按3S按住手柄的电源键Ⓓ，启动手柄。

(4) 手柄通过Type-C供电线给拓展坞和手机壳供电。

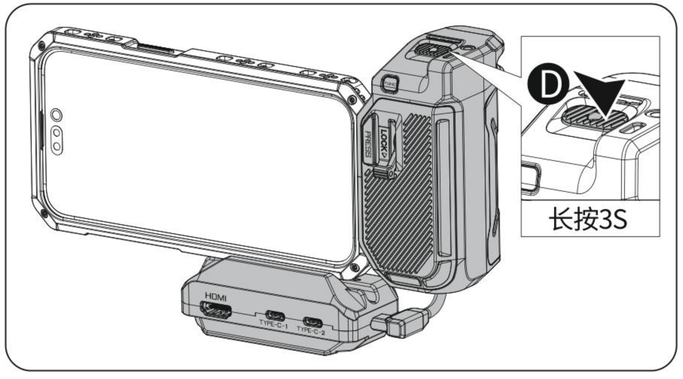

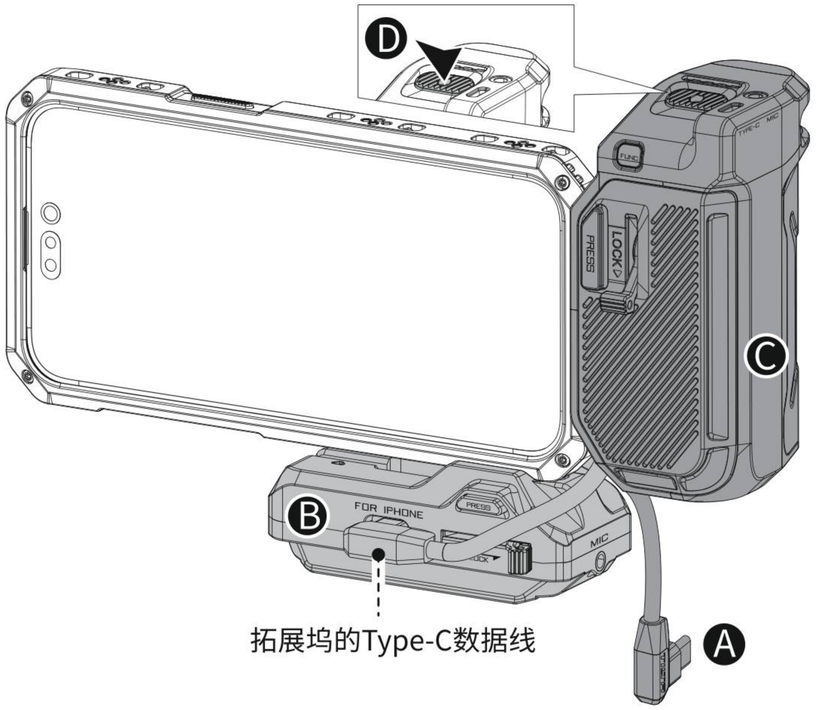

如图iPhone系列跟焦供电侧手柄——电子弹针供电

(1) 手柄的Type-C供电线Ⓐ外放垂挂。

(2) 装配拓展坞Ⓑ和手柄Ⓒ在手机壳上。

(3) 长按3S按住手柄的电源键Ⓓ，启动手柄。

(4) 手柄通过电子弹针给拓展坞和手机壳供电。

拓展坞功率说明

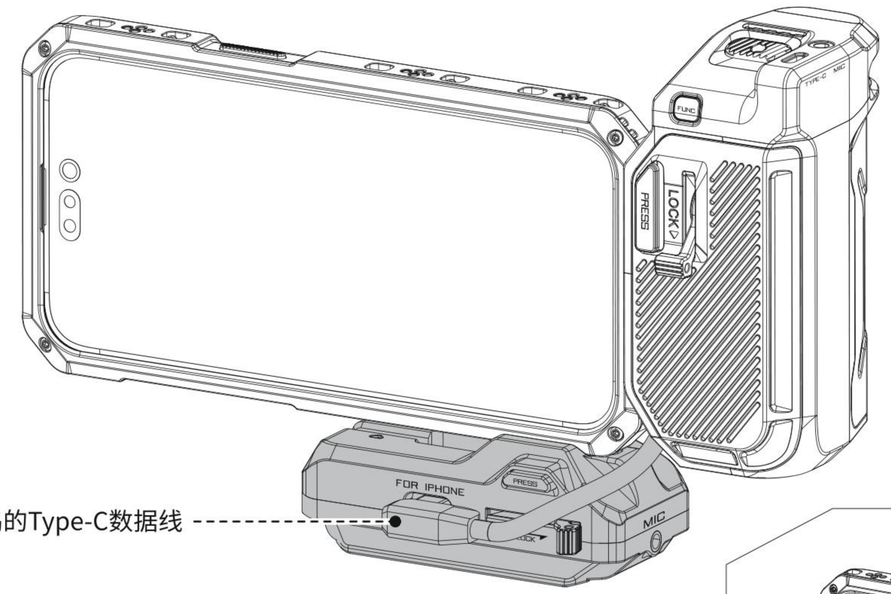

<拓展坞正装>

当拓展坞正装在手机壳时：

(1) PD小于45W时(产品预扣15W)—— 开启手机充电，不开电子触点充电；

(2) 45W≤PD≤65W时(产品预扣15W)——不开启手机充电，开启电子触点充电；

(3) PD>65W时(产品预扣15W)——开启手机和触点充电。

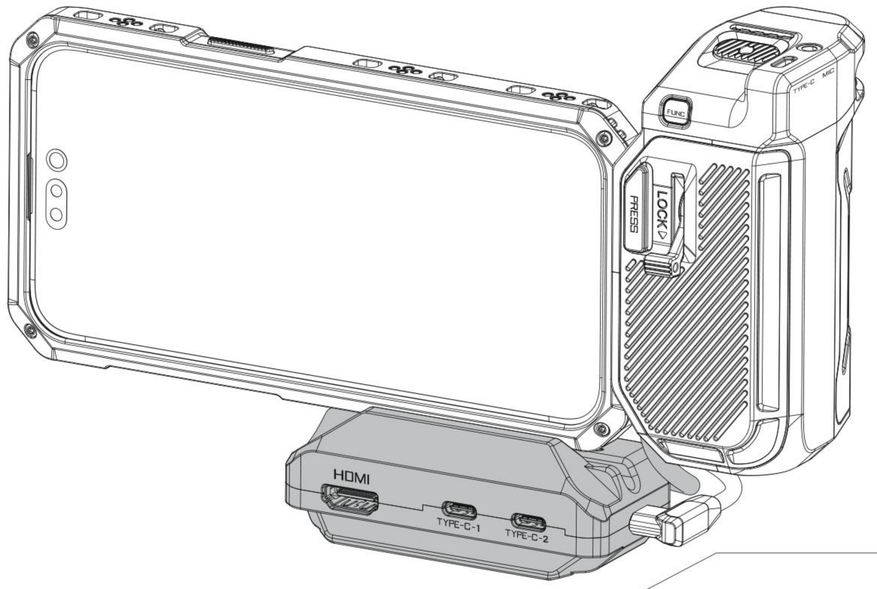

<拓展坞反装>

当拓展坞反装在手机壳时：

电子触点无充电。

33 认识手机壳通用原力N2快拆手托(选配)

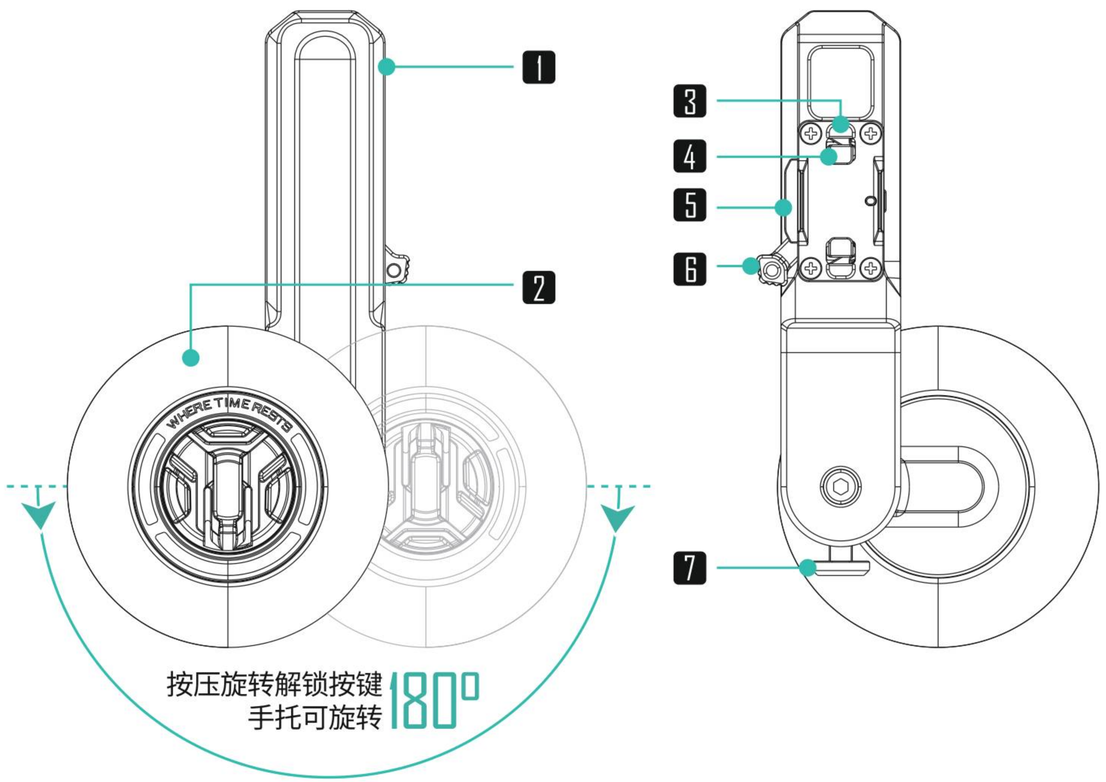

1 NATO滑条	2 手托	3 定位柱	4 卡扣
5 卡扣解锁按键	6 锁紧扳扣	7 旋转解锁按键	

装配手托

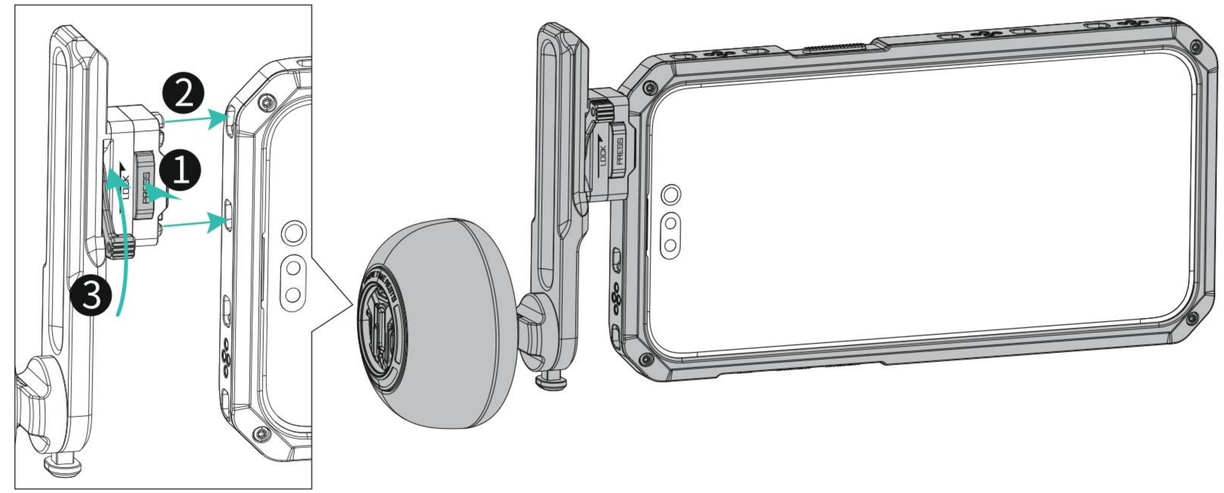

按压卡扣解锁按键①，将快拆手托安装到手机壳的快拆接口②上，锁紧扳扣③完成装配。

拓展原力N II手轮

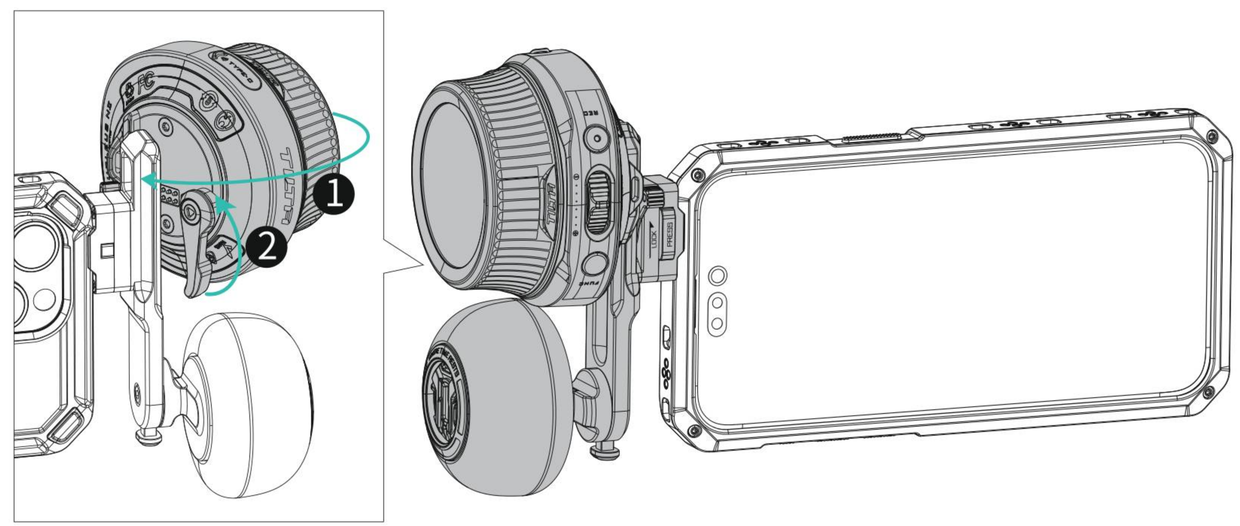

根据图示将原力N II手轮装配到快拆手托的NATO滑条①上，锁紧手轮上的扳扣②完成装配。

认识手机壳通用快拆转接件(选配)

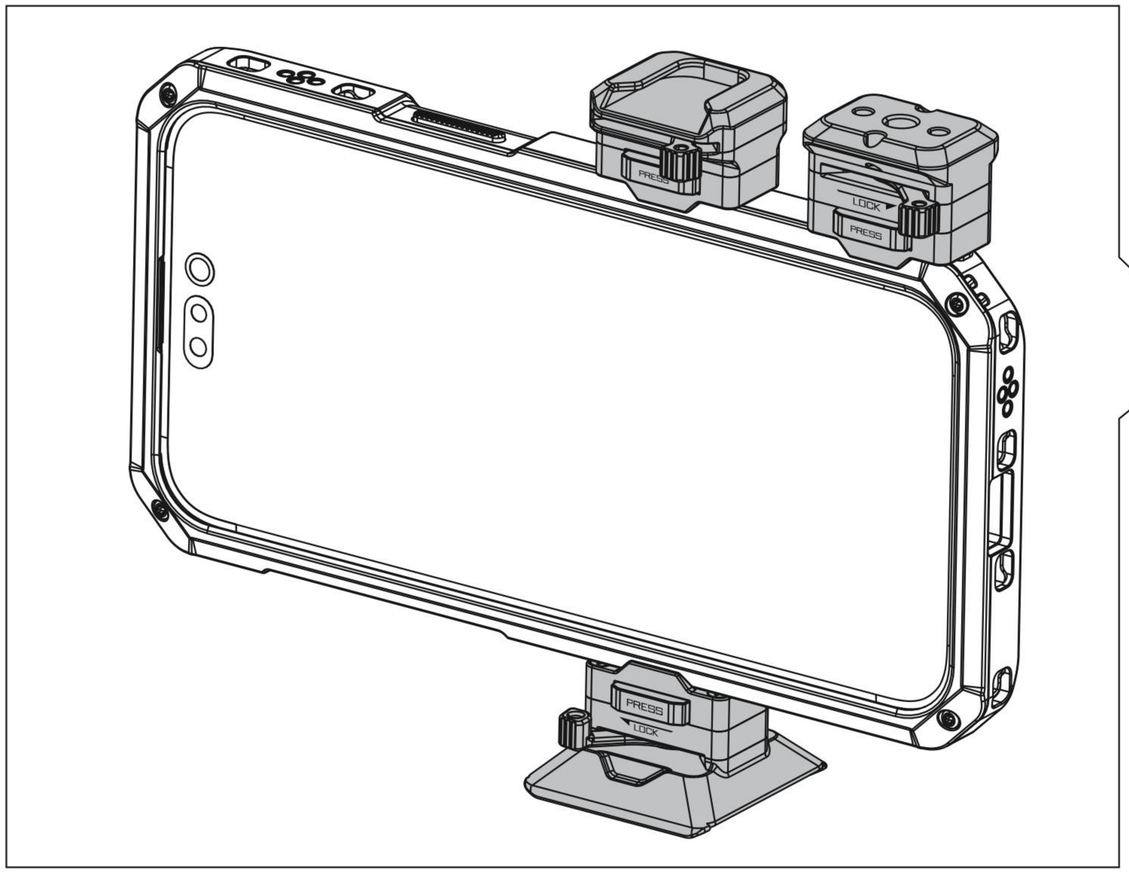

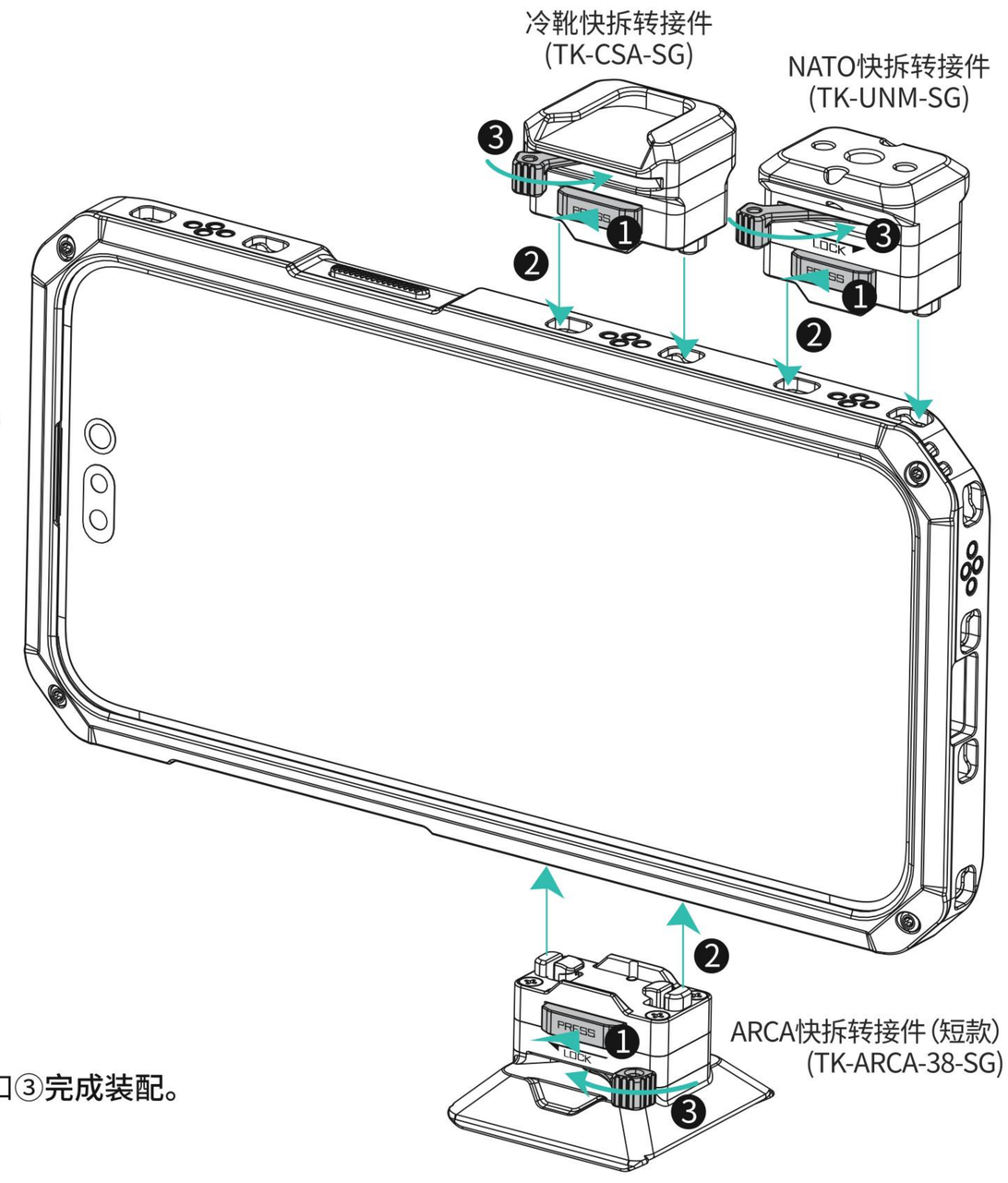

装配手机壳通用快拆转接件

(冷靴快拆转接件 / NATO快拆转接件 / ARCA快拆转接件)

按压快拆转接件的卡扣解锁按键①,将转接件安装到手机壳的快拆接口②上,锁紧扳扣③**完成装配。**

认识手机壳通用侧手柄(选配)

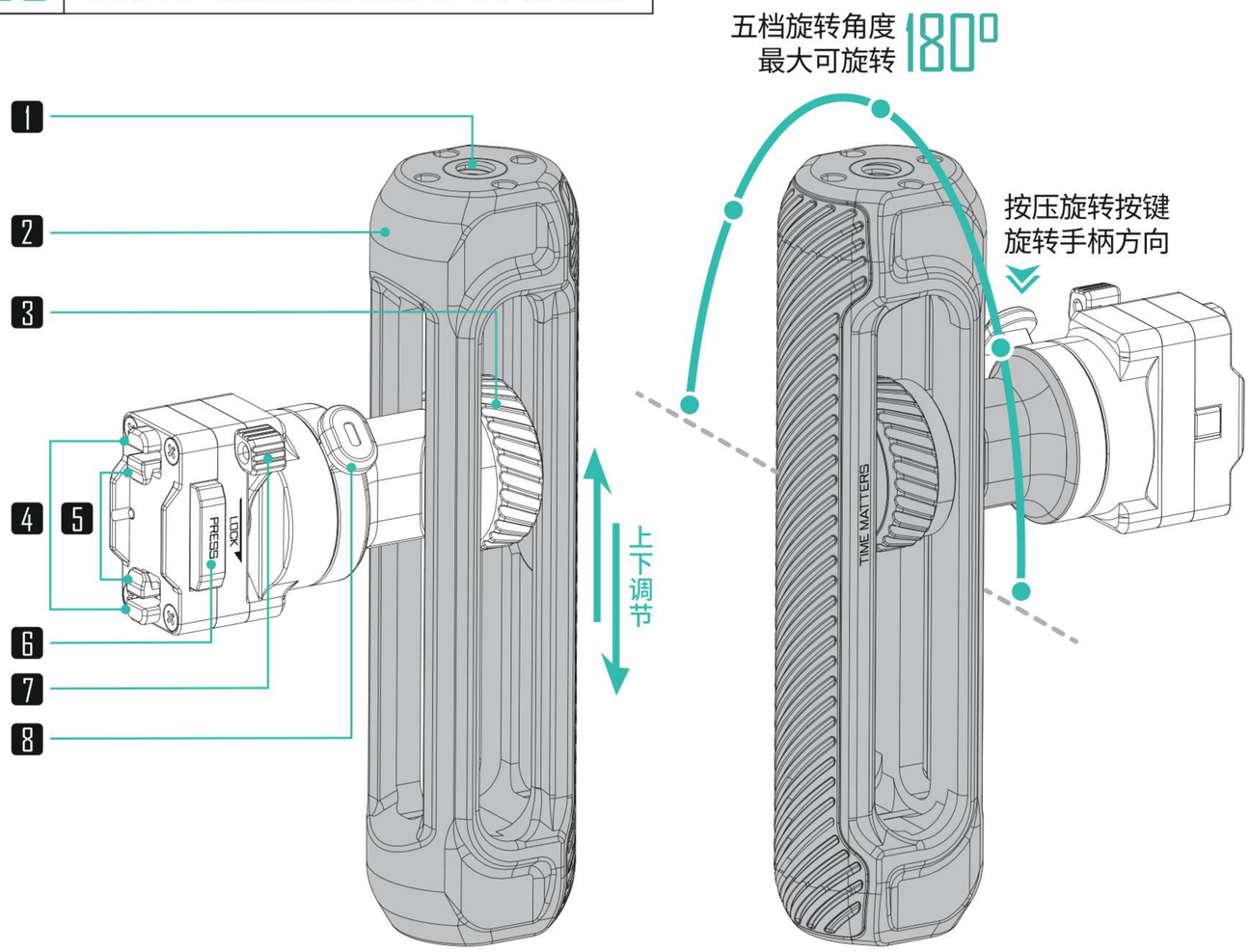

1 1/4定位螺纹孔	4 定位柱	7 锁紧扳扣
2 手柄	5 卡扣	8 旋转按键 按压旋转按键，手柄可在+90°到-90°内定向旋转（共5档旋转，每45°为一个档位）
3 固定旋钮 (固定手柄上下调节的方向)	6 卡扣解锁按键	

装配侧手柄

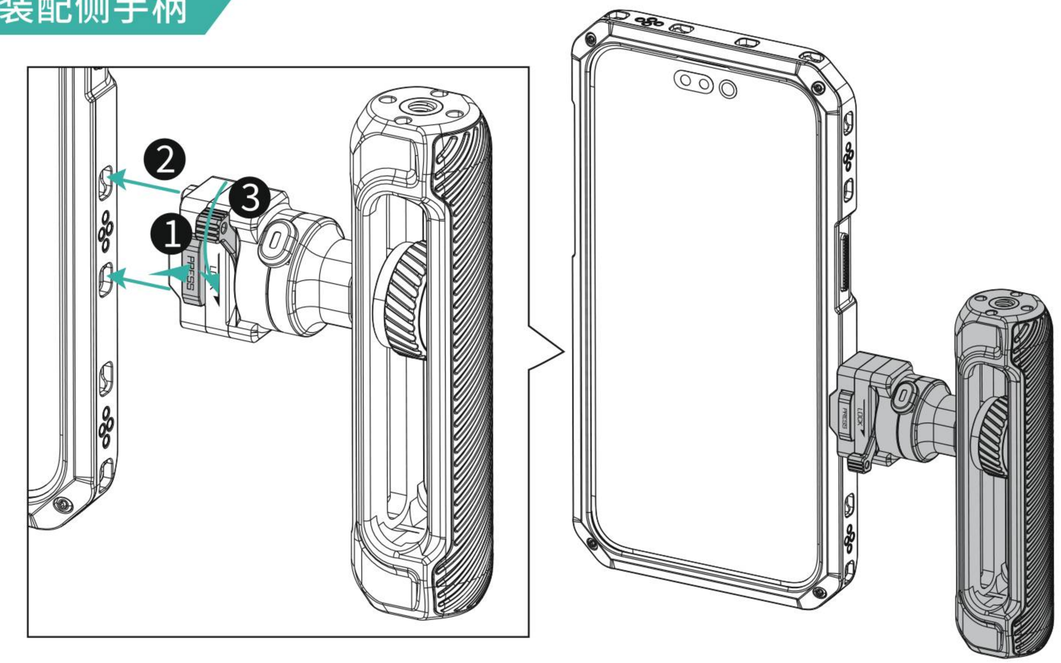

按住手柄的卡扣解锁按键①，将手柄安装到手机壳的快拆接口②上，锁紧扳扣③完成装配。

横拍模式

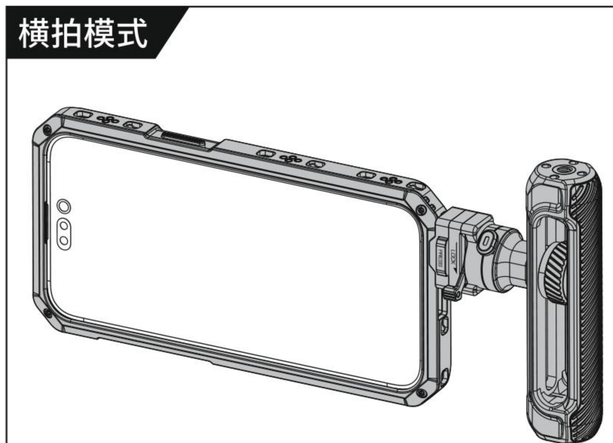

竖拍模式

认识通用mini补光灯/圆形侧手柄/固态硬盘支架（选配）

通用 mini补光灯

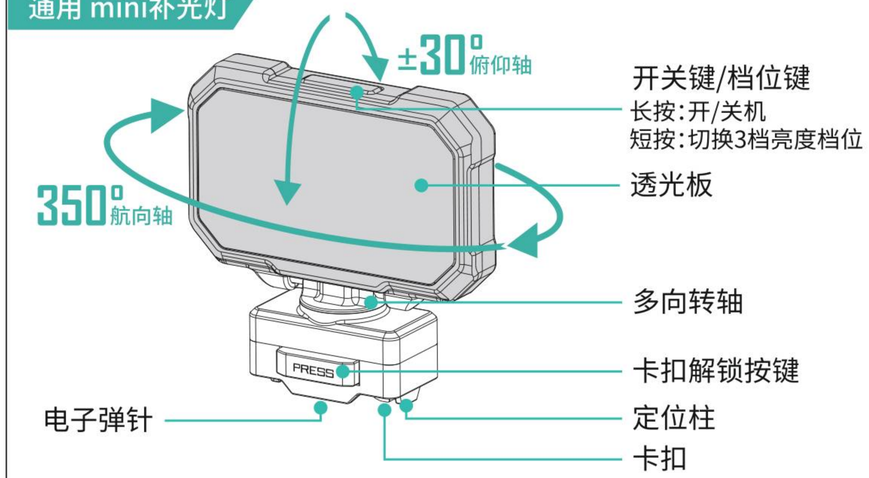

尺寸：53×52×17.6mm	色温：6500±300K
材质：铝合金+SUS304+硅胶+橡胶+石墨尼龙+PC	光通量：67.9lm（一档）、94.1lm（二档）、129.2lm（三档）
重量：36.5g	功率：≤2W
颜色配置：深空灰/钛白色	电压：6-12V兼容
灯珠颜色：白光	电流：0.16A/6V（一档）、0.16A/6V（二档）、0.35A/6V（三档）
灯珠数量：32pcs	
光照距离：≥5m	表面温升（环温24°C）：一档温升33.6°C、二档温升36.5°C、三档温升41°C
显指：≥95RA	

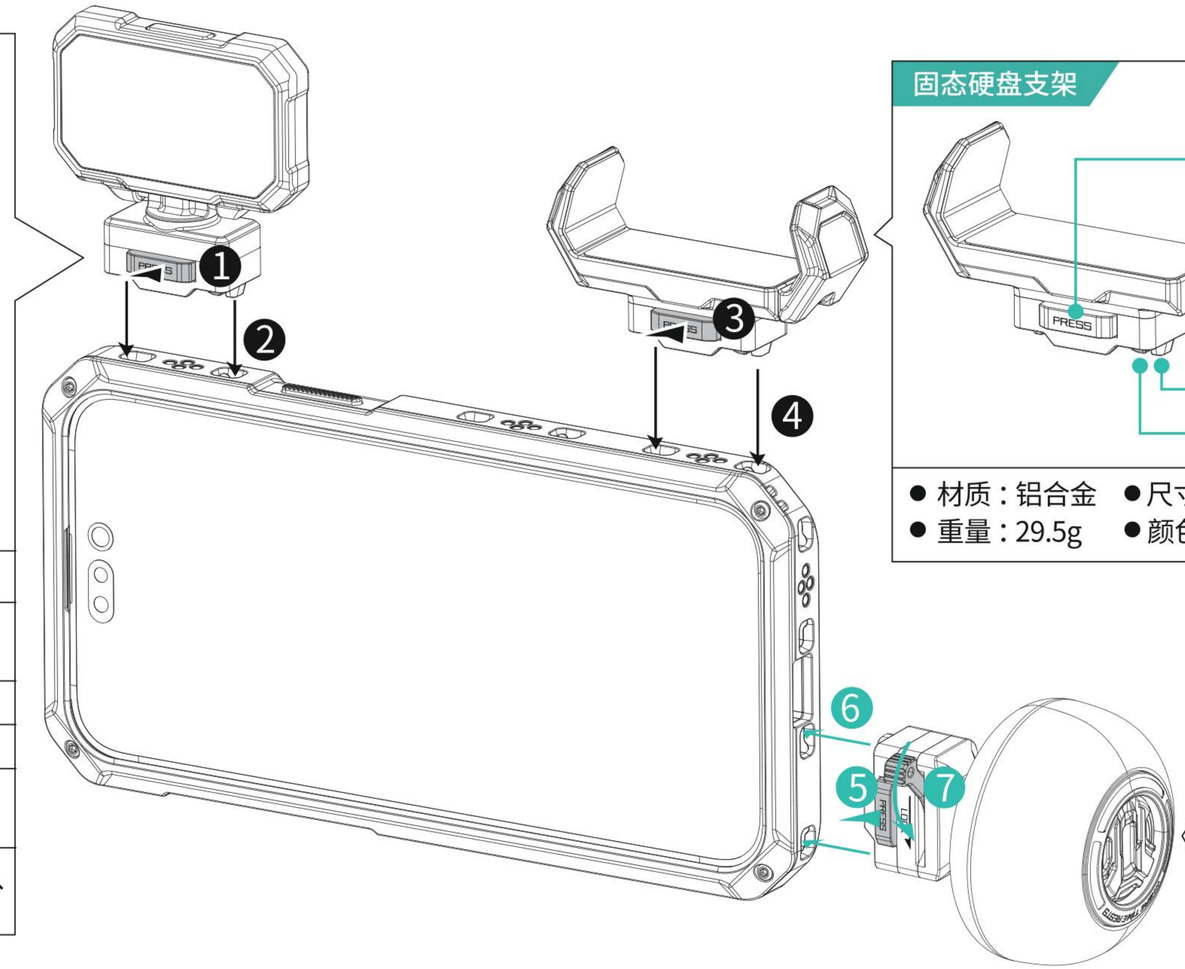

固态硬盘支架

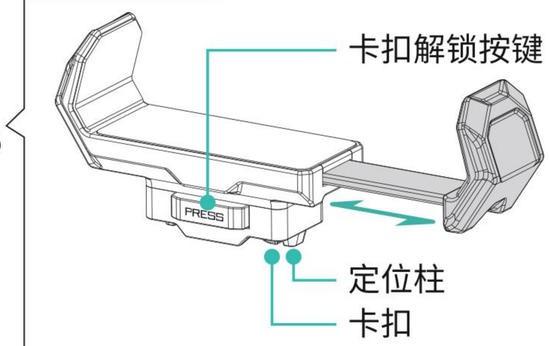

- 材质：铝合金
- 尺寸：60.25×20×30.26mm
- 重量：29.5g
- 颜色配置：深空灰/钛白色

圆形侧手柄

- 材质：铝合金
- 尺寸：63.1×55.8×55.8mm
- 重量：110g
- 颜色配置：深空灰/钛白色

装配通用mini补光灯（TK-MLP-DL-SG）

按压补光灯上的卡扣解锁按键①，将补光灯安装到手机壳上带双向电子触点的快拆接口②上（如图），完成装配。长按开关键即可使用。

装配固态硬盘支架（TK-USH-SG）

按压固态硬盘支架的卡扣解锁按键③，将硬盘支架安装到手机壳的快拆接口④上（如图），完成装配。

装配圆形侧手柄（TK-CWH-SG）

按压圆形侧手柄的卡扣解锁按键⑤，将圆形侧手柄安装到手机壳的快拆接口⑥上（如图），锁紧扳扣⑦完成装配。

装配iPhone系列卡口镜头转接件(选配)

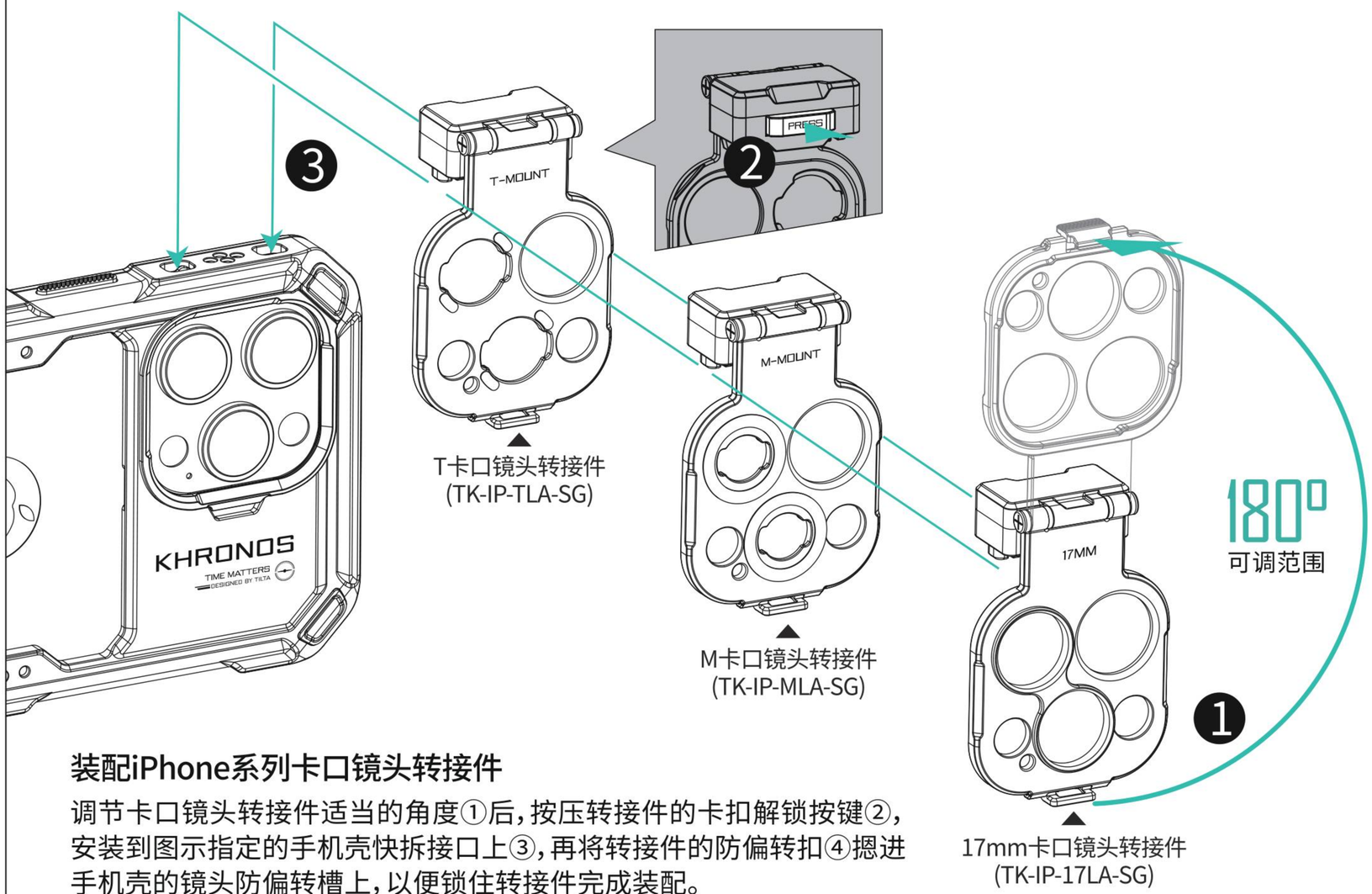

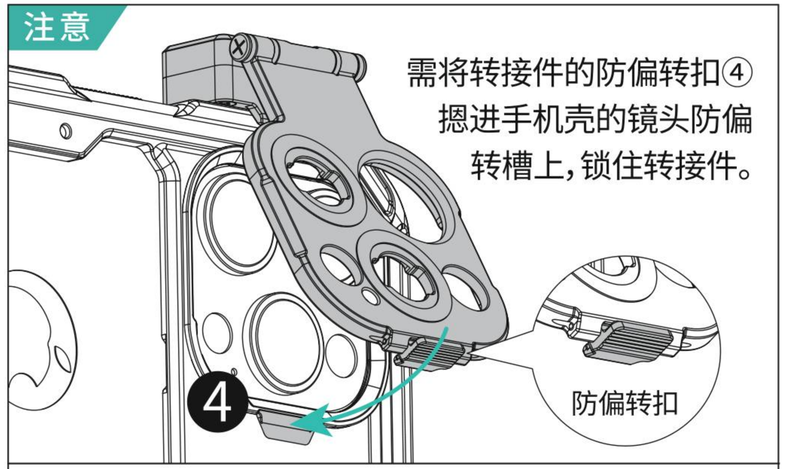

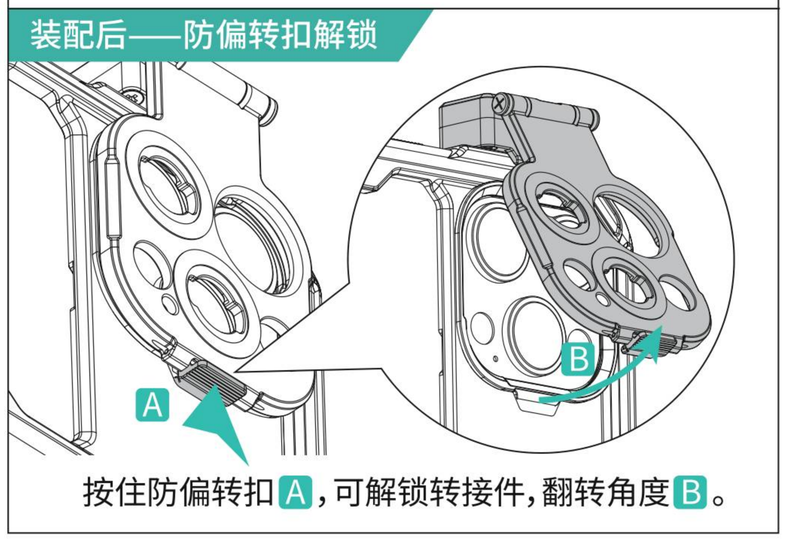

装配iPhone系列卡口镜头转接件

调节卡口镜头转接件适当的角度①后,按压转接件的卡扣解锁按键②,安装到图示指定的手机壳快拆接口上③,再将转接件的防偏转扣④摁进手机壳的镜头防偏转槽上,以便锁住转接件完成装配。
(卡口镜头转接件可180°角度调节)

注意: iPhone系列T卡口镜头转接件(TK-IP-TLA-SG)仅适用于Fotorgear品牌的T卡口手机镜头。

装配 iPhone系列手机滤镜支架/手机滤镜片（选配）

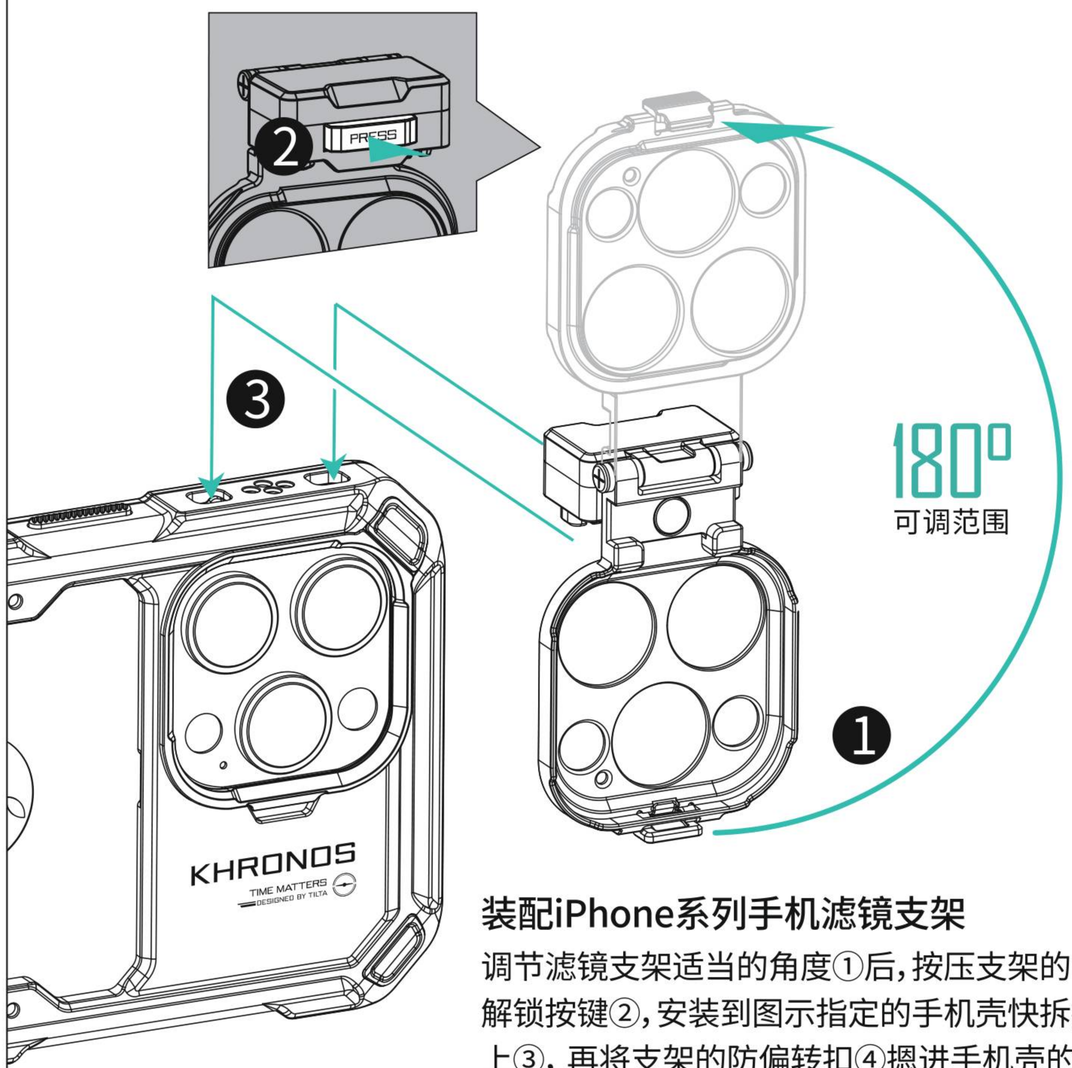

装配iPhone系列手机滤镜支架

调节滤镜支架适当的角度①后，按压支架的卡扣解锁按键②，安装到图示指定的手机壳快拆接口上③，再将支架的防偏转扣④摁进手机壳的镜头防偏转槽上，锁住滤镜支架完成装配。
(滤镜支架可180°角度调节)

注意

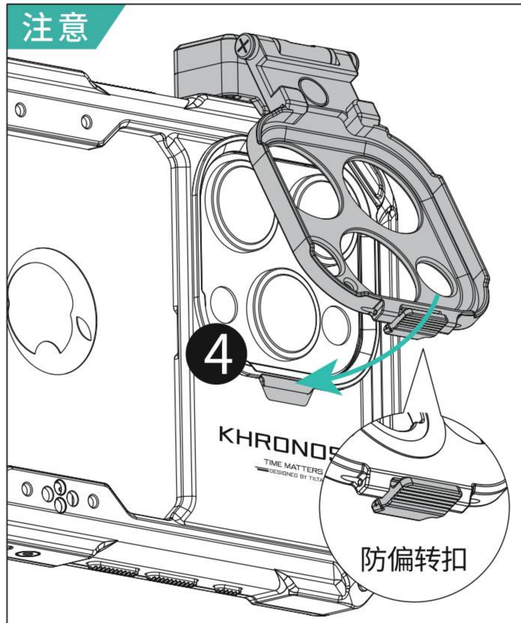

需将支架的防偏转扣④摁进手机壳的镜头防偏转槽上，锁住滤镜支架。

装配后——防偏转扣解锁

按住防偏转扣 A，
可解锁滤镜支架，翻转角度 B。

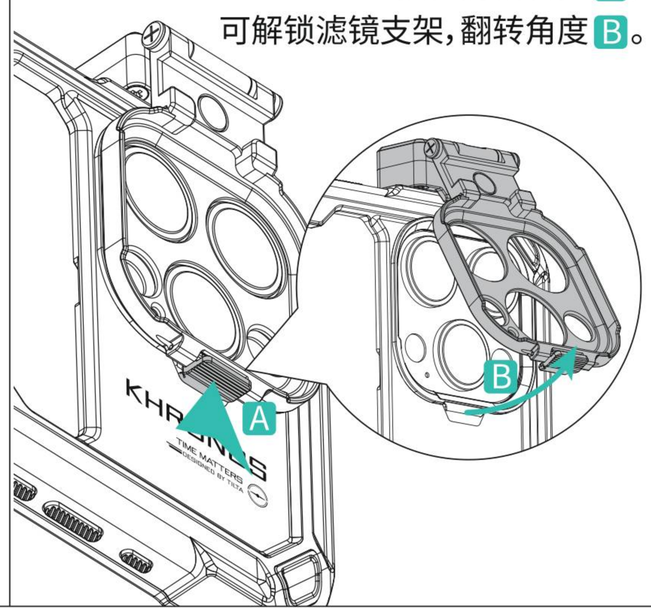

装配iPhone系列手机滤镜片

对准滤镜支架上的限位槽 A，将手机滤镜片 B 磁吸到滤镜支架上，完成装配。

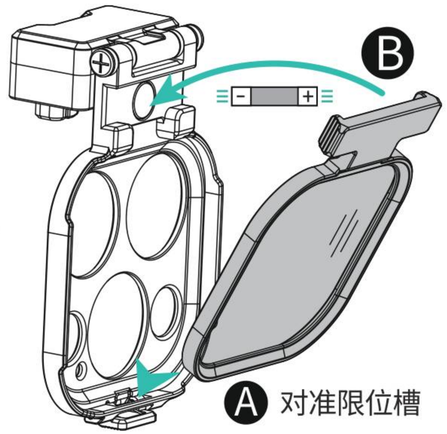

KHRONOS TIME MATTERS
DESIGNED BY TILTA